MP MASTER
MA34066

4-11-74

MODEL 7110A
DIGITAL MULTIMETER
SERIAL NO.
Ⓐ

SYSTRON DONNER

Concord Instrument Division

INSTRUCTION MANUAL

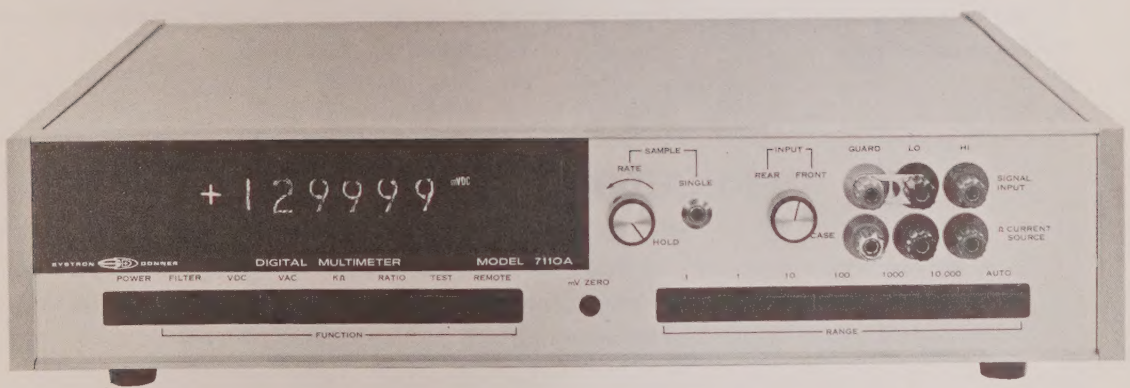

MODEL 7110A
DIGITAL MULTIMETER

SERIAL NO.

Ⓐ

© Copyright 1973 Systron-Donner Corporation

SYSTRON DONNER CORPORATION

TEN SYSTRON DRIVE, CONCORD, CALIFORNIA 94518 U.S.A.
Tel: (415) 682-6161, TWX: 910-481-9479, Cable: SYSTRONDONNER

SYSTRON DONNER
CORPORATION

WARRANTY

Systron-Donner instruments are warranted during a period of one year from date of shipment to original purchaser to be free from defects in material and workmanship. This warranty does not apply to vacuum tubes, except as these are warranted by tube manufacturers. The liability of Seller under this warranty is limited to replacing or repairing any instrument or component thereof which is returned by Buyer, at his expense, during such period and which has not been subjected to misuse, neglect, improper installation, repair, alteration, or accident. Seller shall have the right to final determination as to the existence and cause of a defect. In no event shall Seller be liable for collateral or consequential damages. This warranty is in lieu of any other warranty, expressed, implied, or statutory; and no agreement extending or modifying it will be binding upon Seller unless in writing and signed by a duly authorized officer.

RECEIVING INSPECTION

Every Systron-Donner instrument is carefully inspected and is in perfect working order at the time of shipment. Each instrument should be checked as soon as received. If the unit is damaged in any way, or fails to operate, a claim should immediately be filed with the transportation company.

REPAIRS

Whenever a Systron-Donner instrument requires service, the nearest Systron-Donner representative should be contacted; all representatives will provide immediate service or arrange factory returns when necessary.

Please specify both model and serial number in all correspondence concerning Systron-Donner instruments. Address all inquiries on operation or applications to your nearest sales representative; or, Sales Manager, Concord Instrument Division, Systron-Donner Corporation, 10 Systron Drive, Concord, California 94518.

TABLE OF CONTENTS

		Page
CHAPTER 1 - GENERAL INFORMATION		
1.1	Introduction	1-1
1.2	Specifications	1-1
CHAPTER 2 - INSTALLATION		
2.1	Introduction	2-1
2.2	Receiving Inspection	2-1
2.3	Reshipment	2-1
2.4	Power Requirements	2-1
2.5	Location Site	2-2
2.6	Initial Turn-on	2-2
CHAPTER 3 - OPERATION		
3.1	Introduction	3-1
3.2	Controls, Connectors, and Indicators	3-1
3.3	Overload Protection	3-5
3.4	Guard Usage	3-5
3.5	Manual Operation	3-8
3.5.1	VDC Operation	3-8
3.5.2	VAC Operation	3-8
3.5.3	KΩ Operation	3-8
3.5.4	Ratio Operation	3-9
3.6	Remote Operation	3-10
3.6.1	Remote Control, Option 06	3-10
3.6.2	Digital Outputs, Option 05	3-11
3.7	Acceptance Test Procedure	3-15
3.8	Systems Operation	3-20
3.8.1	Computer Automated Test System (CATS) Interface	3-20
3.9	Application Note	3-23
CHAPTER 4 - MAINTENANCE AND CALIBRATION		
4.1	Introduction	4-1
4.2	Factory Service	4-1
4.3	Routine Maintenance	4-1
4.4	Printed-Circuit Board Repair	4-2
4.5	Calibration	4-2
4.5.1	Preliminary Checks	4-3
4.5.2	Power Supply Voltage Adjustment	4-5
4.5.3	VDC Adjustments	4-5
4.5.4	Auto Range Adjustments	4-9
4.5.5	KΩ Adjustments (Option 03)	4-9
4.5.6	AC Adjustments (Option 02)	4-10
4.5.7	Remarks	4-11

		Page
CHAPTER 5 - CIRCUIT DESCRIPTIONS, DRAWINGS, AND PARTS LISTS		
5.1	Introduction	5-1
5.2	Analog to Digital Conversion	5-1
5.3	Circuit Descriptions	5-2
7-03763101	Model 7110A Block Diagram	5-5
037637	Test Assembly	5-6
037638	Chassis Assembly (Sheet 1 of 2)	5-7
037638	Chassis Assembly (Sheet 2 of 2)	5-8
037239-4-1	Front Panel Assembly	5-9
037276-4-1	Input Guard Assembly	5-10
037248-4-1	Rear Panel Assembly	5-11
037261-4-1	Left Hand Side Assembly	5-12
037257-4-1	Center Support Assembly	5-13
037270-4-1	Front Guard Assembly	5-14
037267-4-1	Rear Guard Assembly	5-15
037283-4-1	Left Hand Annunciator Assembly	5-16
037280-4-1	Right Hand Annunciator Assembly	5-17
031331-4-1	J201, Line Filter Assembly	5-18
037254-6-1	T201, Power Transformer (Sheet 1 of 2)	5-19
037254-6-1	T201, Power Transformer (Sheet 2 of 2)	5-20
037630-8-1	Shipping Assembly Parts List	5-21
037637	Test Assembly Parts List	5-22
037638	Chassis Assembly Parts List	5-24
037239-4-1	Front Panel Assembly Parts List	5-26
037276-4-1	Input Guard Assembly Parts List	5-28
037248-4-1	Rear Panel Assembly Parts List	5-29
037261-4-1	Left Hand Side Assembly Parts List	5-32
037257-4-1	Center Support Assembly Parts List	5-34
037262-4-1	Gated Pulse Transformer Parts List	5-36
037167-4-1	Pulse Transformer Assembly Parts List	5-37
037270-4-1	Front Guard Assembly Parts List	5-38
037267-4-1	Rear Guard Assembly Parts List	5-39
037283-4-1	Left Hand Annunciator Assembly Parts List	5-40
037280-4-1	Right Hand Annunciator Assembly Parts List	5-41
031331-4-1	Filter Line Assembly Parts List	5-42
037168-7-1	A1, Guarded Control Circuit	
	Description	A1-1
	Assembly	A1-3
	Schematic	A1-4
	Parts List	A1-5
037279-7-1	A2, DC Attenuator Filter Circuit	
	Description	A2-1
	Assembly	A2-2
	Schematic	A2-3
	Parts List	A2-4

TABLE OF CONTENTS (Cont'd)

		Page
CHAPTER 5 - CIRCUIT DESCRIPTIONS, DRAWINGS, AND PARTS LISTS (Cont'd)		
037176-7-1	A3, Input Amplifier Circuit	
	Description	A3-1
	Schematic	A3-3
	Assembly	A3-4
	Parts List	A3-5
037462-4-1	Reed Switch (Low Voltage) Parts List	A3-11
037182-4-1	Resistor Network Assembly	A3-12
	Parts List	A3-13
7-03762901	A4, Integrator & Zero Detector	
	Circuit Description	A4-1
	Assembly	A4-2
	Schematic	A4-3
	Parts List	A4-4
7-03762301	A5, A-D Control Logic Circuit	
	Description	A5-1
	Schematic	A5-3
	Assembly	A5-4
	Parts List	A5-5
7-03755101	A6, Reference and Power Supply	
	Circuit Description	A6-1
	Schematic	A6-3
	Assembly	A6-4
	Parts List	A6-5
037204-7-1	A10, Analog Mother-Board Circuit	
	Description	A10-1
	Assembly	A10-3
	Schematic	A10-4
	Parts List	A10-5
037258-4-1	A101, Shielded Power Supply Assembly	A101-1
	Parts List	A101-2
037208-7-1	A11, Digital Count and Control	
	Circuit Description	A11-1
	Assembly	A11-5
	Schematic	A11-6
	Parts List	A11-8
037212-7-1	A12, Switch Circuit Description	A12-1
	Assembly	A12-2
	Schematic	A12-3
	Parts List	A12-4
CHAPTER 6 - OPTIONS AND ACCESSORIES		
6.1	Introduction	6-1
6.2	Standard Options	6-1

TABLE OF CONTENTS (Cont'd)

		Page
CHAPTER 6 - OPTIONS AND ACCESSORIES (Cont'd)		
037234-4-1	Option 01, 50 Hz Line Operation	
	Circuit Description	OPT 01-1
	Assembly	OPT 01-3
	Parts List	OPT 01-4
037196-7-1	Option 02, A9, AC Converter	
	Circuit Description	OPT 02-1
	Assembly	OPT 02-2
	Schematic	OPT 02-3
	Parts List	OPT 02-4
037192-7-1	Option 03, A7, Ohms Current Source	
	Circuit Description	OPT 03-1
	Assembly	OPT 03-3
	Schematic	OPT 03-4
	Parts List	OPT 03-5
037290-7-1	A7A1, RVL-3 Assembly	OPT 03-9
	Schematic	OPT 03-10
	Parts List	OPT 03-11
037183-4-1	A7A3, Resistor Network Assembly	OPT 03-13
	Parts List	OPT 03-14
037221-4-1	Option 05, A14, Connector BCD	
	Circuit Description	OPT 05-1
	Assembly	OPT 05-2
	Parts List	OPT 05-3
037220-7-1	Assembly	OPT 05-4
	Schematic	OPT 05-5
	Parts List	OPT 05-6
037226-7-1	Option 06, Remote Control Circuit	
	Description	OPT 06-1
	Assembly	OPT 06-2
	Schematic	OPT 06-3
	Parts List	OPT 06-4
037181-4-1	Option 08, Rear Input Circuit	
	Description	OPT 08-1
	Assembly	OPT 08-2
	Parts List	OPT 08-3
037732	Option 10, AC Converter (rms)	
	Circuit Description	OPT 10-1
	Guard/Calibration Cover Assembly	OPT 10-3
	Parts List	OPT 10-4
7-03764201	Option 10, A9, Converter Assembly	OPT 10-5
	Schematic	OPT 10-6
	Parts List	OPT 10-7
037730	RMS to DC Converter Module Assembly.	OPT 10-11

		Page
CHAPTER 6 - OPTIONS AND ACCESSORIES (Cont'd)		
037479-4-1	Option 301 or 302, Remote Program Circuit Description	OPT 301,2-1
	Assembly	OPT 301,2-2
	Parts List	OPT 301,2-3
037479-4-1	A17, Remote Program Assembly	OPT 301,2-4
	Schematic	OPT 301,2-5
	Assembly	OPT 301,2-6
	Parts List	OPT 301,2-7
	Option 303, A13, A14, Remote Programming Circuit Description	OPT 303-1
	Option 304, Inverted BCD Circuit Description	OPT 304-1
037216-7-1	Option 305, A13, BCD 4-2-2-1 Output Circuit Description	OPT 305-1
	Assembly	OPT 305-2
	Schematic	OPT 305-3
	Parts List	OPT 305-4
037240-7-1	A14, BCD Connector Assembly	OPT 305-6
	Schematic	OPT 305-7
	Parts List	OPT 305-8
6.3	Standard Accessories	6-2
	Accessories	ACC-1
037550-4-1	100/200 VAC Modification Assembly	ACC-2
	Parts List	ACC-3
037528-7-1	Cable, Model 7110A to HP 5050B Assembly	ACC-4
	Schematic	ACC-5
	Parts List	ACC-6
037494	P.C. Board Extender Assembly	ACC-7
	Parts List	ACC-8
039986	3-1/2" Full Rack Assembly	ACC-9
	Parts List	ACC-10
CHAPTER 7 - SUPPLEMENTAL INFORMATION		
7.1	Introduction	7-1

LIST OF FIGURES

Figure 3.1	Front Panel, Model 7110A	3-3
3.2	Rear Panel, Model 7110A	3-3
3.3	Guard Usage	3-6
3.4	Rear Panel Ω Current Source Triax Cable Connection	3-9

LIST OF FIGURES (Cont'd)

Figure 3.5	Timing Diagram, Sample Rate Control in any Position Except Full CCW or Fast	3-13
3.6	Timing Diagram, Sample Rate in Fast	3-13
3.7	Timing Diagram, Sample Rate Any Position, Except Fast	3-14
3.8	Timing Diagram, Sample Rate Not Fast, Not Hold	3-14
3.9	Timing Diagram, General	3-15
3.10	Block Diagram, CATS System	3-21
3.11	Partial Interface Schematic, CATS System	3-22
3.12	Lower Full Scale Ω Range Setup	3-23
4.1	Model 7110A Guard/Calibration Cover	4-7
4.2	Interior Top-Rear View of Model 7110A.	4-8
5.1	Analog to Digital Conversion Cycle	5-1

LIST OF TABLES

Table 3.1	Front Panel, Model 7110A	3-1
3.2	Rear Panel, Model 7110A	3-4
3.3	Correct Function/Range Pushbutton Chart	3-7
3.4	Remote Pin Assignments, Option 06	3-10
3.5	BCD Pin Assignments	3-11
3.6	Acceptance Test	3-16
4.1	Calibration Equipment for Model 7110A.	4-3
4.2	Preliminary Checks	4-4
5.1	Drawing Index	5-3
6.1	Option Drawing Index	6-1
6.2	Accessories	6-2

CHAPTER 1
GENERAL INFORMATION

1.1 INTRODUCTION

The Model 7110A Digital Multimeter (DMM) is an integrating, dual slope, highly accurate, system compatible, digital multimeter. A full five digit readout plus an overrange digit and five measurement ranges of dc/dc ratio are provided in the basic unit. The Model 7110A combines fast measurement speed with excellent normal mode noise rejection at line related frequencies.

The dual slope integration technique is used in the Model 7110A. At the time of a typical measurement, the unknown input voltage causes a current to flow in an integrating capacitor for a length of time determined by an internal clock. During this time period the capacitor will charge to a voltage proportional to the input voltage. After this charging period, an internal reference current is used to discharge the capacitor; and the time is measured with the internal clock oscillator and the digital counting chain. The count, proportional to time, is a measure of the input voltage.

1.2 SPECIFICATIONS

DC Volts (VDC FUNCTION)	Ranges	(.1)±100.000 mV, (1) ±1000.00 mV, (10) ±10.0000 V, (100)±100.000 V, and (1000)±1000.00 V full scale plus 30% overrange on all ranges except 10% on the 1000 range.
	Resolution	0.001% of range (1 µV on the .1 range).
	Input Resistance	10,000 MΩ on .1, 1, and 10 ranges. 10 MΩ on 100 and 1000 ranges.
	Accuracy (+23°C ±1°C)*	.1 Range: ±0.005% reading ±0.005% full scale for 24 hr. ±0.01% reading ±0.01% for 3 months. Other Ranges: ±0.005% reading ±0.001% full scale for 24 hr. ±0.008% reading ±0.003% full scale for 3 months.

DC Volts (VDC FUNCTION) (Cont'd)	Temperature Stability (0 to +50°C)	.1 VDC Range: ±0.001% reading ±0.002% full scale/°C. Other Ranges: ±0.001% reading ±0.0003% Full scale/°C.
	Full Scale Settling Time (to ±0.01%)	20 ms with FILTER out. 800 ms with FILTER in. 150 ms on the .1 Range.
	Normal Mode Noise Rejection	FILTER out: 60 dB at 60 Hz and 50 Hz with Opt. 01. FILTER in: 80 dB at 60 Hz and 50 Hz with Opt. 01.
	Common Mode Noise Rejection (1 kΩ unbalance)	140 dB at dc. 120 dB at all frequencies up to 61 Hz.
	Maximum Input	±1100 V dc on any range.
DC/DC Ratio (RATIO FUNCTION)	Ranges	(.1)±.0100000:1, (1) ±.100000:1, (10)±1.00000:1, (100)±10.0000:1, and (1000) ±100.000:1 full scale plus 30% overrange on all ranges except ±100.000:1 range.
4 wire system with isolated commons. The HI and LO, Eref, terminal potentials must both be within ±12 V of the potential of Ex common.	Reference Input (Eref)	+2 to +11 V dc.
	Unknown Input (Ex)	±1 μV to ±1100 V.
	Input Resistance	Eref: 1 MΩ from each terminal to signal low. Ex: 10,000 MΩ on .01:1, .1:1, and 1:1 ranges; 10 MΩ on 10:1 and 100:1 ranges.
	Accuracy (+23°C ±1°C)*	.01:1 Range: ±0.05% reading ± 0.005% full scale (10V/Eref) for 24 hrs. ±0.01% reading ± 0.01% full scale (10V/Eref) for 3 months. Other Ranges: ±0.005% reading ± 0.001% full scale (10V/Eref) for 24 hrs. ±0.008% reading ± 0.003% full scale (10V/Eref) for 3 months.

DC/DC Ratio (RATIO FUNCTION) (Cont'd)	Temperature Stability (0 to +50°C)	.01:1 Range: (±0.001% reading ±0.0005% full scale/°C) 10/Eref. Other Ranges: (±0.001% reading ±0.0003% full scale/°C) 10/Eref.
	Full Scale Settling Time	Same as DC Volts.
	Normal Mode Noise Rejection	Same as DC Volts.
	Common Mode Noise Rejection	Same as DC Volts.
AC Volts Option 02 (VAC FUNCTION)	Ranges	(1)1.00000 V, (10) 10.0000 V, (100)100.000 V, and (1000)1000.00 V full scale plus 30% overrange on all ranges except 1000.
	Resolution	0.001% of range (10 µV on 1 range).
	Input Impedance	1 MΩ shunted by 70 pF (120 pF with Opt. 08).
	Accuracy (+20°C to +30°C)	±0.1% reading ±0.02% full scale for 3 months at all frequencies from 30 Hz to 100 kHz (1% of F.S. & above).
	Full Scale Settling Time (to ±0.1%)	500 ms, maximum.
	Maximum Input	750 V rms at all frequencies up to 100 kHz.

Resistance Option 03 (KΩ FUNCTION)

Full Scale Readout	Current thru Rx	Resolution
.100000 kΩ(.1)	1 mA	1 mΩ
1.00000 kΩ(1)	1 mA	10 mΩ
10.0000 kΩ(10)	1 mA	100 mΩ
100.000 kΩ(100)	100 µA	1 Ω
1.00000 MΩ(1000)	10 µA	10 Ω
10.0000 MΩ(10,000)	1 µA	100 Ω

Overrange	30% on all ranges.
Measurement Technique	4 wire Ω measuring configuration.

Resistance Option 03 (KΩ FUNCTION) (Cont'd)	Accuracy (+20°C to +30°C)	.1 Range: ±0.01% reading ±0.01% full scale for 3 months. Other Ranges: ±0.01% reading ±0.005% full scale for 3 months.
	Full Scale Step Response (to 0.01%)	.1 to 1000 Ranges: 500 ms maximum. 10 MΩ Range: 3 sec. maximum without FILTER.
	Overload Protection	Up to 1000 volts may be applied across current sensing or resistance input terminals.
	Temperature Stability	.1 Range: (±0.0015% reading ±0.002% full scale)/°C. Other Ranges: (±0.0015% reading ±0.0003% full scale)/°C.
General	Range Selection Display	5 full digits plus over-range digit of gas discharge tubes. Automatic decimal point positioning for all ranges and functions. Lighted annunciator for all Functions and Ranges. Warning lamp lighted for incom-improper Range/Function setting or options not installed. Plus/minus and off-scale indicator provided.
	Range Selection	Manual and automatic. (Remote range selection with Opt. 06.)
	Input Configuration	Fully floating and guarded in all functions.
	Maximum Common Mode Voltage	500 volts dc or peak ac.
	Kickback Noise	< 1 mV peak to source with 7110A FILTER out (when measured with 1 MΩ input impedance and 5 kHz bandwidth oscilloscope.

General (Cont'd)	Sample Rate	Adjustable from approx. 10 samples per second to 1 sample per 10 seconds from front panel control. Full ccw detent position provides fixed sample rate of approx. 30 samples per second. HOLD detent position allows single sample from front panel pushbutton.
	Calibration	All calibration controls and test points are accessible by removing top cover. No special tools except an insulated screwdriver are required for calibration.
	Temperature Range	0° to +50°C at up to 80% humidity, noncondensing.
	Warmup	30 minutes to full accuracy.
	Dimensions	3-1/2"H x 17"W x 17-1/2"D. (8.9 x 43.2 x 44.5 cm) An integral tilt-stand for bench use and flanges for rack mounting are included. Chassis is drilled for Jonathan 120QD Series slides.
	Power	115/230 (±10%) V ac, 58-62 Hz, 75 W. Option 01 for 50 Hz use.

Digital Outputs Option 05	This option provides parallel BCD outputs of all measurement data plus flag lines for Data Ready (i.e. print command) and Busy Conditions. All outputs are buffered, short-circuit proof and fully isolated. Logic levels are DTL/TTL compatible positive true: "1" State (true) = +4 (±0.5) volts, 6 kΩ source. "0" State (false) = 0 (±0.5) volts, 12 mA sink. This option also allows remote control of sample rate and data transfer/inhibit lines (ground true logic).

Remote Programming Option 06	This option allows remote control of all RANGE, FUNCTION, and FILTER selections in single line format. All external control is DTL/TTL compatible, ground true logic: "1" State (line called) = Logic ground or +0.5 volts, maximum. "0" State (line not called) = Open circuit of +2.2 volts, minimum.
Special Systems Interface Options	The digital output/remote programming section of the Model 7110A has been designed to afford flexibility in supplying special codes, formats and logic levels as may be required. Please contact your local Systron-Donner representative for detailed information.

*Specifications shown are maintained with no adjustment. Substantially improved accuracy for 100 mV range may be obtained with periodic re-zeroing of front panel mV ZERO adjustment which also is designed to offset effects of low-level thermals in measuring leads or input cables.

CHAPTER 2
INSTALLATION

2.1 INTRODUCTION

This chapter outlines the procedures for initial inspection and installation of the Model 7110A Digital Multimeter (DMM). Instructions for reshipment are included should the Model 7110A require return to the Systron-Donner Corporation.

2.2 RECEIVING INSPECTION

Prior to accepting the meter from the shipper, inspect the condition of the shipping container for any indication of freight damage. Any sign of such damage must be noted by both the shipper and receiver and should be reported to the insurance investigator.

Immediately following the removal of the meter from the shipping carton, inspect for possible physical damage incurred during shipment. Check surface for scratches or dents and note the condition of knobs and connectors. Should any damage be noted, notify your nearest Systron-Donner representative---DO NOT USE THE METER UNTIL INSTRUCTED TO DO SO BY THE REPRESENTATIVE.

2.3 RESHIPMENT

If possible, use the original packing materials. Your Systron-Donner field office can provide materials similar to those used for the original factory packaging.

GENERAL PACKING INSTRUCTIONS

1) Wrap the instrument in heavy paper or plastic prior to placing into the shipping container.
2) Use a strong carton or wooden box to house the instrument.
3) Use ample packing material on all sides and protect the front panel with cardboard strips.
4) Seal the package with strong tape or metal bands and mark "DELICATE INSTRUMENT" on all sides.
5) All correspondence should refer to full instrument nomenclature (model and serial number).

2.4 POWER REQUIREMENTS

The Model 7110A Multimeter is equipped with a three-conductor power cord that automatically grounds the meter (chassis ground) when a matching power receptacle is employed. An adapter which provides a chassis ground should be used whenever the power cord is mated to a two-terminal outlet.

The Model 7110A operates from either 115 or 230 V rms at 50 or 60 Hz and draws approximately 30 watts of power. A LINE switch on the rear panel is used to select the desired voltage.

NOTE

The Model 7110A DMM is shipped with a 3/4 A 3AG fuse (115V operation). Should 230V operation be employed, the standard 3/4 A 3AG fuse should be replaced with a 3/8 A 3AG fuse to adequately protect the meter.

2.5 LOCATION SITE

The Model 7110A DMM employs forced-air cooling. The air outlet on the rear panel must remain unobstructed while the meter is energized.

2.6 INITIAL TURN-ON

This procedure verifies that no major damage has occurred to the instrument during transit, and that the instrument is operative.

NOTE

Prior to performing the initial turn-on procedure, become familiar with the instrument's controls as described in Section 3.2, FRONT PANEL DESCRIPTION.

1) Check the position (115V-230V) of the LINE switch and connect the ac power cord to the appropriate power source.
2) Depress the POWER switch to the ON position. The display should illuminate.
3) Push the VDC FUNCTION switch and the 10 RANGE switch. Apply a short across the SIGNAL INPUT HI and LO terminals. Display should indicate ±00.0000/±2 digits and the VDC annunciator should illuminate. Remove the short.
4) Push-on the TEST FUNCTION switch. The display should read, +10.0000 ±3 digits.

After the instrument has successfully completed the initial turn-on procedure, refer to the Acceptance Test Procedure, Section 3.7 .

CHAPTER 3
OPERATION

3.1 INTRODUCTION

This chapter describes the Model 7110A Digital Multimeter (DMM) operating procedures. Included is a table of the instrument controls, connectors, and indicators followed by a brief section on overload protection and guard circuit usage. Delineation of the manual, remote, and system operation of the DMM precedes the concluding acceptance test procedure.

3.2 CONTROLS, CONNECTORS, AND INDICATORS

The various controls, connectors, and indicators of the Model 7110A DMM are described in Table 3.1 Front Panel and Table 3.2 Rear Panel. Figures 3.1 and 3.2 provide indexed locations of each item in the tables.

TABLE 3.1 FRONT PANEL, MODEL 7110A
(See Figure 3.1)

Index	Name		Function
1	POWER (pushbutton)		The "in" position turns the main power on.
2	READOUT (indicator)	O.S., RATIO,* mVDC, VDC 10^{-3}, VAC MΩ, KΩ	In the readout display left hand annunciator, O.S. indicates that the last reading is above 1.3 times the full scale of the range and the accuracy should be questioned. RATIO indicates that an external reference is being used and the number displayed is the ratio of the unknown voltage and this external reference. * indicates that an improper FUNCTION and RANGE combination has been selected. The right hand annunciator includes mVDC, VDC, VAC, MΩ, and KΩ function indicators. 10^{-3} is used with the RATIO FUNCTION in the .1 RANGE to multiply the readout by .001.

TABLE 3.1 FRONT PANEL, MODEL 7110A (Cont'd)

Index	Name	Function	
3	FUNCTION (pushbuttons)	FILTER, VDC VAC, KΩ, RATIO, TEST REMOTE	FILTER is push-on push-off type. When in the de-pressed position the input attenuator filter is connected between the input terminals and the input amplifier, providing about 80 dB of normal mode attenuation at 60 Hz. VDC, VAC, KΩ, RATIO, TEST, and REMOTE are all interlocked functions.
4	mV ZERO (control)		This screwdriver adjust potentiometer controls zeroing of the DVM with the input shorted in the VDC FUNCTION and .1 RANGE.
5	SAMPLE/RATE (control)	HOLD	This control varies the sample rate from 30 per second in the counterclockwise detent position and from 10 samples per second to 1 sample per 10 seconds. HOLD detent position allows a single sample from front panel SINGLE pushbutton.
6	SAMPLE/SINGLE (pushbutton)		Allows a single sample when pushed.
7	INPUT (switch)	FRONT REAR	Selects either front or rear inputs.
8	RANGE (pushbuttons)	.1, 1, 10, 100, 1,000, 10,000, AUTO	These full scale ranges are applied to the FUNCTION selected.
9	CASE, metal (connector)		Universal binding post with metal cap provides a chassis ground terminal.
10	GUARD, grey plastic (connector)		Universal binding post for guard connection.
11	Ω CURRENT SOURCE/LO, black plastic (connector)		Universal binding post for current source negative.

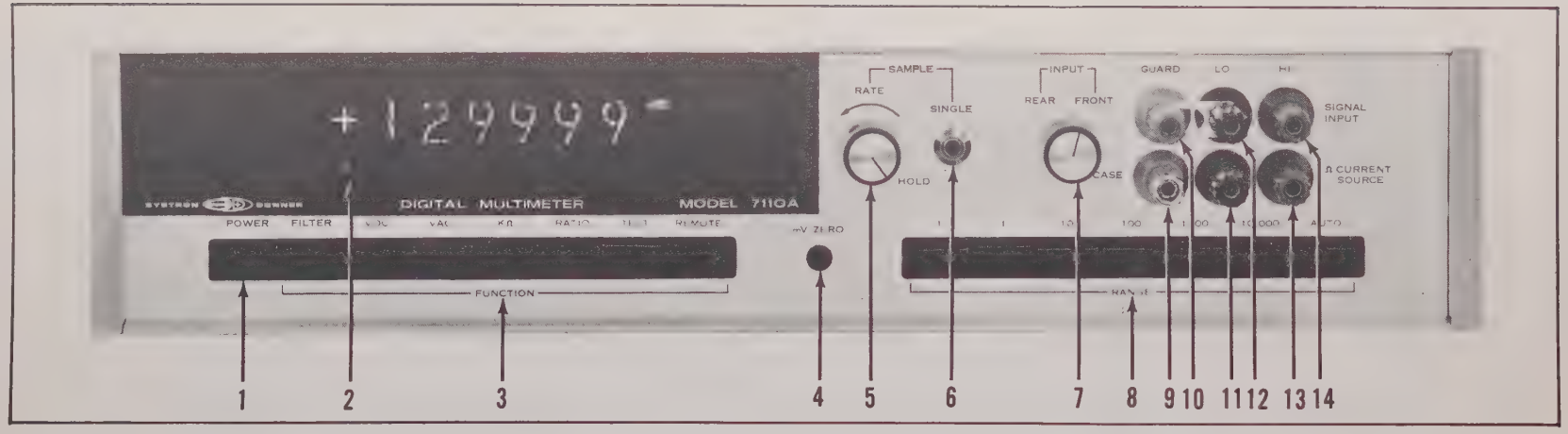

FIGURE 3.1 FRONT PANEL, MODEL 7110A

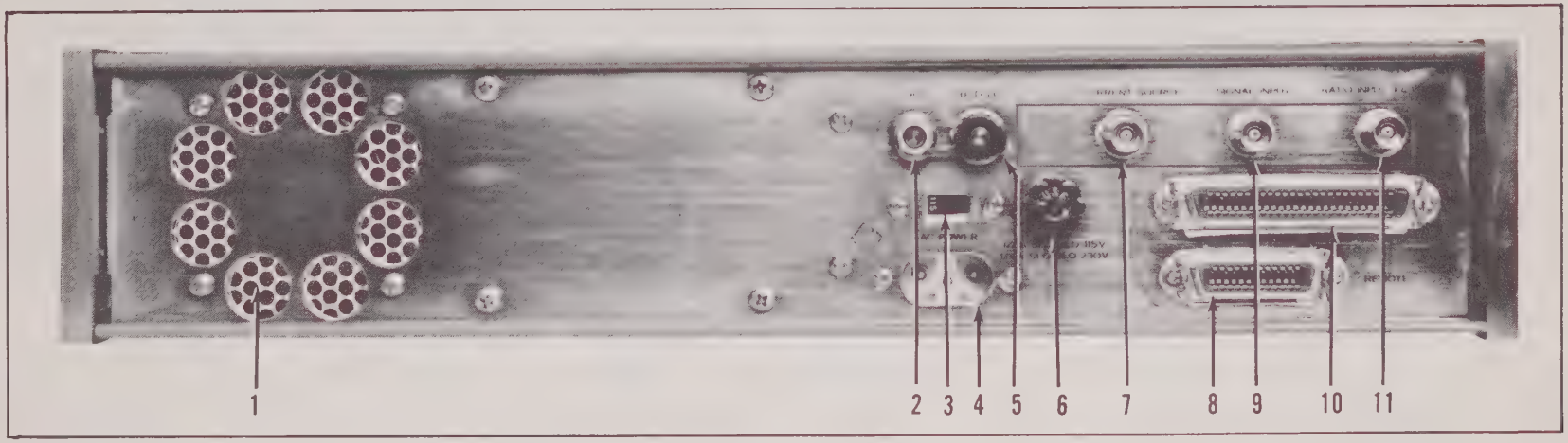

FIGURE 3.2 REAR PANEL, MODEL 7110A

TABLE 3.1 FRONT PANEL, MODEL 7110A (Cont'd)

Index	Name		Function
12	SIGNAL INPUT/ LO, black plastic (connector)		Universal binding post for negative side of input signal.
13	Ω CURRENT SOURCE/HI, red plastic (connector)		Universal binding post for current source positive.
14	SIGNAL INPUT/ HI, red plastic (connector)		Universal binding post for positive side of signal. source.

TABLE 3.2 REAR PANEL, MODEL 7110A

Index	Name		Function
1	FAN EXHAUST		Cooling air is exhausted through this opening. Do not obstruct this air outlet.
2	CASE, metal (connector)		Universal binding post for rear panel chassis ground.
3	AC POWER (switch)	115/230	This switch selects either 115 V or 230 V ac power source.
4	AC POWER (connector)		This power cord receptacle allows connection of either 115 V or 230 V ac power.
5	BCD LO (connector)		Universal binding post for rear panel BCD output common.
6	FUSE (holder)	3/4 A SLO BLO 115 V, 3/8 A SLO BLO 230 V	This holder contains the main power fuse. Be sure to change fuse to match the AC voltage selected.
7	Ω CURRENT SOURCE OPTION 08 (connector)		When the input is switched to the rear panel this tri-axial BNC type connector acts as the HI (center conductor) and LO (middle conductor) Ω CURRENT SOURCE terminals. The outer shell

TABLE 3.2 REAR PANEL, MODEL 7110A (Cont'd)

Index	Name	Function
7 (Cont'd)		is a current shield separate from the GUARD circuit.
8	REMOTE OPTION 06,301,302 (connector)	This 24-pin connector provides remote control of the Model 7110A.
9	SIGNAL INPUT OPTION 08 (connector)	When the input is switched to the rear panel this triaxial BNC type connector acts as the HI (center conductor), LO (middle conductor), and GUARD (outer conductor) terminals.
10	BCD OPTION 05 (connector)	This 50-pin connector provides parallel BCD outputs of all measurement data plus flag lines for Data Ready and Busy conditions.
11	RATIO INPUT +12 V MAX (connector)	This triaxial BNC type connector provides +12 V Max inputs for ratio measurements. Positive is on the center terminal, Negative on the middle terminal, and Guard on the outer shell.

3.3 OVERLOAD PROTECTION

The Model 7110A Digital Multimeter can withstand 1000 V dc in all ranges on the HI and LO SIGNAL INPUT connectors. The LO side may be floated above chassis ground not to exceed 500 V dc. The rear panel RATIO INPUT +12 V MAX connector may only accept a maximum voltage of +12 V dc.

3.4 GUARD USAGE

For increased rejection of ac and dc (Common Mode Rejection)* voltages during measurements, a GUARD shield has been provided on the front and rear panels of the Model 7110A DMM. In measurements where common mode voltages are not expected to be a problem, the GUARD binding post may be connected to the SIGNAL INPUT LO terminal using the shorting strap provided.

*CMR = Common Mode Rejection

CAUTION

Do not leave the GUARD floating since the 500 V dc limitation between the GUARD and LO terminals may be exceeded.

Where common-mode voltages will present significant readout errors such as voltages found in the source circuitry between SIGNAL SOURCE LO and power line ground, measurements should be made with the GUARD connected at the source. The GUARD should be connected to a dc potential above ground equal to the LO input terminal potential above ground in such a way that the GUARD current does not flow through any source circuit impedance affecting the measured voltage.

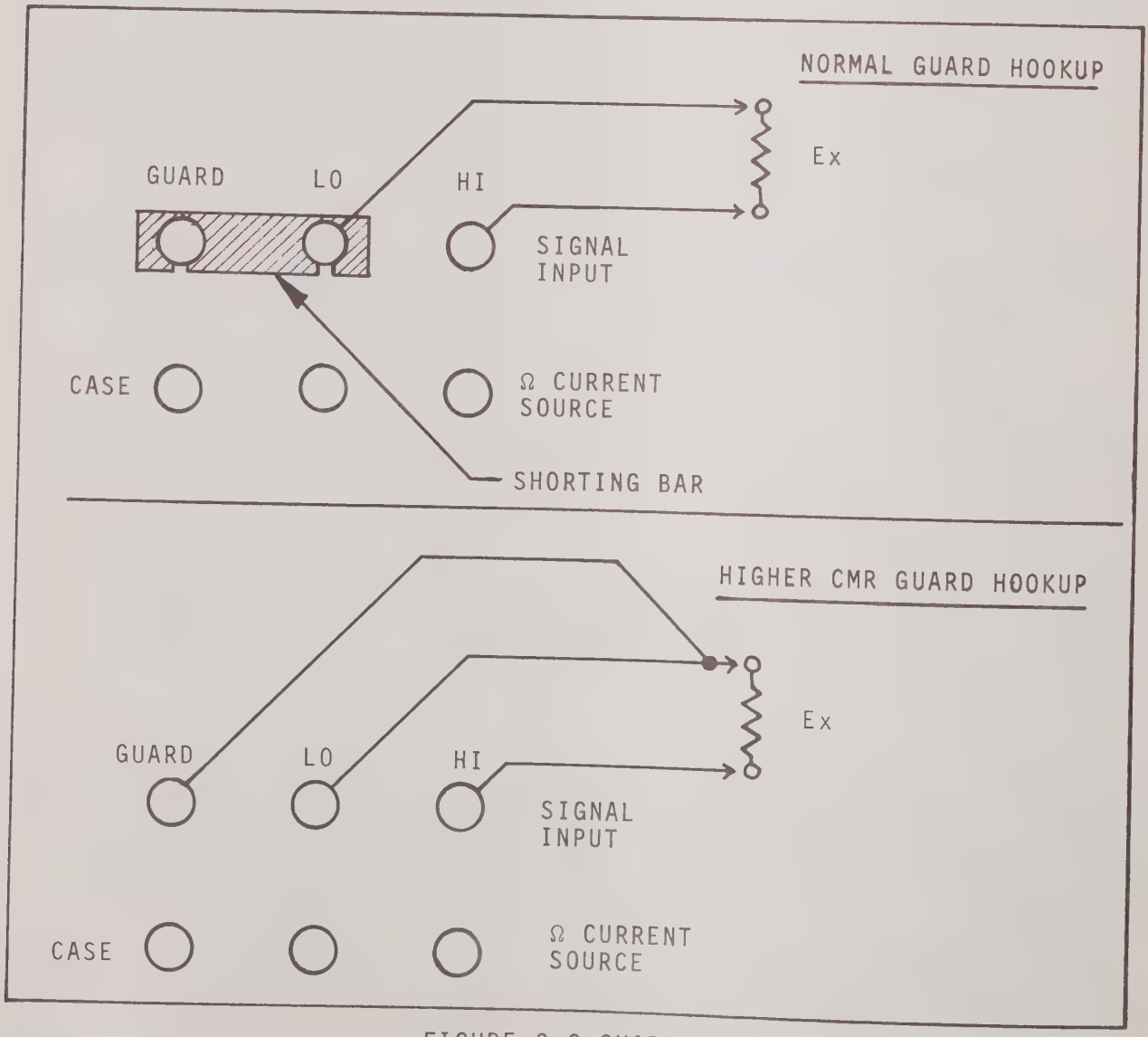

FIGURE 3.3 GUARD USAGE.

TABLE 3.3 CORRECT FUNCTION/RANGE PUSHBUTTON CHART

FUNCTION \ RANGE	.1	1	10	100	1000	10,000	AUTO
FILTER/VDC	□	□	□	□	□	*	□
FILTER/VAC	*	⊡	⊡	⊡	⊡	*	⊡
FILTER/KΩ	⊡	⊡	⊡	⊡	⊡	⊡	⊡
FILTER/RATIO	□	□	□	□	□	*	□
TEST	△	△	△	△	△	*	△
REMOTE	△	△	△	△	△	△	△

□ Proper FUNCTION/RANGE pushbutton combination.

△ Proper FUNCTION/RANGE pushbutton combination w/defeated RANGE.

* Improper FUNCTION/RANGE pushbutton combination.

⊡ □ If option is installed.

* If option is not installed.

3.5 MANUAL OPERATION

Manual operation of the Model 7110A includes local control of all DMM functions and ranges. Common controls for all manual modes of operation are:

SAMPLE RATE controls	Set the knob to the desired sampling rate either fast, variable, or HOLD with pushbutton single sample.
FRONT-REAR INPUT switch	Select either front or rear input (with Option 08 only).
FILTER pushbutton	The "in" position provides 80 dB of common mode noise rejection at 60 Hz.
REMOTE pushbutton	This allows operating the unit from the rear panel REMOTE inputs when Option 06 is installed.
TEST pushbutton	This function displays 100,000 counts and is used for calibrating the instrument.

For all operations, the DMM should be on for at least 30 minutes to reach specified accuracy.

3.5.1 VDC Operation

Push on the POWER switch and allow the DMM to warm up. Select the VDC FUNCTION and an appropriate RANGE pushbutton. Note that AUTO will allow the unit to select the appropriate range automatically. If manually selecting the range, choose one with the desired resolution without an off scale (O.S.) indication. With the INPUT switch, select FRONT for front panel signal input or REAR for rear panel signal input. Set the SAMPLE RATE in the counterclockwise detent position and push on the filter for added noise rejection. Couple the dc voltage to the SIGNAL INPUT HI and LO terminals. Leave the GUARD shorted to the LO terminal unless added shielding is needed or the dc source has a GUARD terminal.

3.5.2 VAC Operation

Push the VAC and appropriate RANGE pushbuttons and push off the FILTER button. Apply the ac signal to the HI and LO SIGNAL INPUT terminals. The sample RATE control may be varied for the desired sampling rate.

3.5.3 KΩ Operation

Push the KΩ pushbutton and select a range. Connect an unknown resistor across the SIGNAL INPUT HI and LO terminals and then connect the Ω CURRENT SOURCE HI and LOW terminals across the resistor. The reading will be a measure of the voltage between the two points developed by the current flow in the resistor.

If using the rear inputs for the Ω CURRENT SOURCE, a double-shielded dual coax lead should be used with the rear panel triaxial BNC connector (see Figure 3.4). The shield for each HI and LO lead should be tied together and to the outer shell of the triaxial BNC which is the Ω CURRENT SOURCE common. The second outer shield should be connected to the GUARD terminal, available on the outer shell of the SIGNAL INPUT triaxial connector. A special cable material, specification #37534-6-1, is available for systems connections.

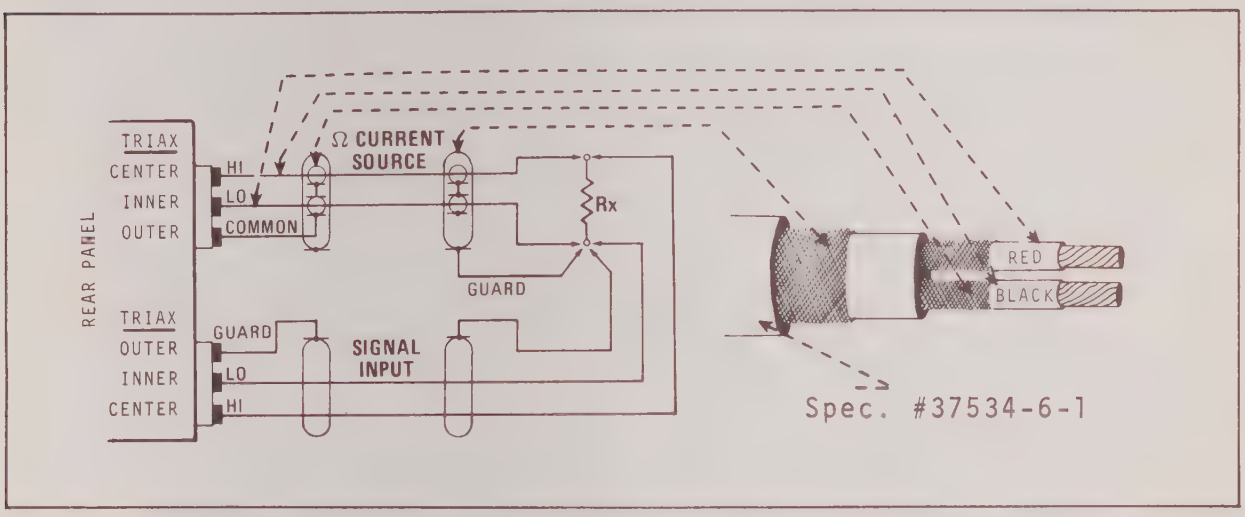

FIGURE 3.4 REAR PANEL Ω CURRENT SOURCE TRIAX CABLE CONNECTION.

Where resistances greater than 10 MΩ are to be measured with a computer controlled system, one can make an accurate measurement by first measuring a precision resistor of 10 MΩ or less (R1) and then making a second measurement with the unknown high-value resistor (Rx) in shunt with R1. The system's computer can then calculate the product of the two measurements divided by their difference. For example, if R1 is 10 MΩ, an unknown shunt resistance, Rx, of $10^{12}\Omega$ would cause a one digit difference between the two readings. This procedure may therefore be used to measure resistance values between 10^{6} and 10^{12} ohms and may be easily programmed into systems using a computer:

Equation 1

$$Rx = \frac{R1 \cdot R2}{R1 - R2}$$

where: R2 = resistance of parallel combination of R1 and Rx

3.5.4 Ratio Operation

Select the RATIO and an appropriate range pushbutton. Select FRONT or REAR INPUT and connect +2 to +11 volts between the inner shield and the center conductor of the RATIO INPUT triaxial connector with the positive of the external reference on the center conductor. The positive and negative of the external reference should not be more

positive than +12 volts or more negative than -12 volts with respect to the LO SIGNAL INPUT connection.

3.6 REMOTE OPERATION

Remote operation includes the Remote Control Option 06 and the BCD Data Out Option 05.

3.6.1 Remote Control, Option 06

With Option 06 installed, the Model 7110A may be operated remotely using single line format. Control is provided over all RANGE and FUNCTION pushbuttons with DTL/TTL compatible ground true logic - "1" state (line called) = logic ground or +0.5 V dc maximum, "0" state (line not called) = open circuit or +2.2 V dc minimum. The connector type is a 24 contact Amphenol 57-40240 and mates with Amphenol 57-30240.

Press on the POWER and REMOTE pushbuttons, set the sample control to the desired rate, and remotely select the RANGE and FUNCTION of J208. The proper PIN and RANGE association is listed in Table 3.4, REMOTE PIN ASSIGNMENTS.

TABLE 3.4 REMOTE PIN ASSIGNMENTS, OPTION 06
(J208 REMOTE connector is Amphenol 57-40240)

PIN	SELECTED FUNCTION/RANGE[1]
1	REMOTE COMMON[2]
3	VDC
5	VAC
7	KΩ
9	RATIO
11	TEST
13	FILTER
15	AUTO
17	10,000
19	1000
20	100
21	10
22	1
23	.1

[1] The logic is ground true. If any line is low with respect to the Digital Common output line when not in REMOTE, the FUNCTION or RANGE called for by the front panel pushbuttons may be confused.

[2] This line is open when REMOTE is not called.

The following schematics apply to the REMOTE 06 Option:

A12, Switch P.C. Board Schematic	37212-7-1
Option 06, Remote Control Schematic	37226-7-1

3.6.2 Digital Outputs, Option 05

For the data portion of the Remote Operation section, Option 05 provides parallel BCD outputs of all measurement data plus flag lines for PRINT command, INHIBIT RESET, START, INHIBIT TRANS, and BUSY conditions. All outputs are buffered, short-circuit proof and fully isolated. The logic levels are TTL/DTL compatible positive true.

"1" state (true) = +4 ±0.5 volts, 6 kΩ source.

"0" state (false) = 0 ±0.5 volts, 12 mA sink.

The standard BCD pin assignments are listed in Table 3.5 with connections for interfacing the Model 5103 Digital Printer to the Model 7110A Digital Multimeter. The connector J207 is an Amphenol 50-pin type 57-40500 and mates with P207 50-pin type 57-30500.

TABLE 3.5 BCD PIN ASSIGNMENTS

REAR PANEL			INTERFACE CABLE	
MODEL 7110A AMPH 57-40500 (Positive True)			MODEL 7110A AMPH 57-30500	MODEL 5103 AMPH 57-30500
FUNCTION		J207 PIN	P207 PIN	P1 or P2 PIN
DIGITS (N)				
10^0	8	27	27	27
	4	26	26	26
	2	2	2	2
	1	1	1	1
10^1	8	29	29	29
	4	28	26	28
	2	4	4	4
	1	3	3	3
10^2	8	31	31	36
	4	30	30	30
	2	6	6	6
	1	5	5	5
10^3	8	33	33	33
	4	32	32	32
	2	8	8	8
	1	7	7	7
10^4	8	35	35	35
	4	34	34	34
	2	10	10	10
	1	9	9	9
10^5	8	37	37	37
	4	36	36	36
	2	12	12	12
	1	11	11	11

TABLE 3.5 BCD PIN ASSIGNMENTS (Cont'd)

FUNCTION	J207 PIN	P207 PIN	P1 or P2 PIN
DECIMAL POINT Exponent (a) - values up to 7 ($N \times 10^a$)			
-8	39	39	39
-4	38	38	38
-2	14	14	14
-1	13	13	13
ANNUNCIATOR			
8	41	41	16
4	40	40	40
2	16	16	41
1	15	15	15

	8421	PRINTER PRINTS
VDC	1000	2
mVDC	0001	1
VAC	0010	9
KΩ	0011	8
MΩ	0100	4
(IMPROPER RANGE)*	1111	*
RATIO	1100	6
RATIO x 10^{-3}	1101	7
TEST or NO RANGE	0000	0

All other output codes are improper ranges.

POLARITY			
+	42	Not Used	Not Used
-	17	17	17
OVERLOAD			
$\overline{OL}$	18	18	18
OL	43	43	42
SIG COM	49	49	50
+.5 V	24	Not Used	Not Used
$\overline{INHIBIT\ RESET}$	22	Not Used	Not Used
PRINT	23	23	23
$\overline{START}$	46	46	50 (switched)
$\overline{INHIBIT\ TRANS}$	47	47	4
BUSY	48	Not Used	Not Used
CHASSIS	50	Not Used	Not Used
+2.5 V	25	Not Used	Not Used

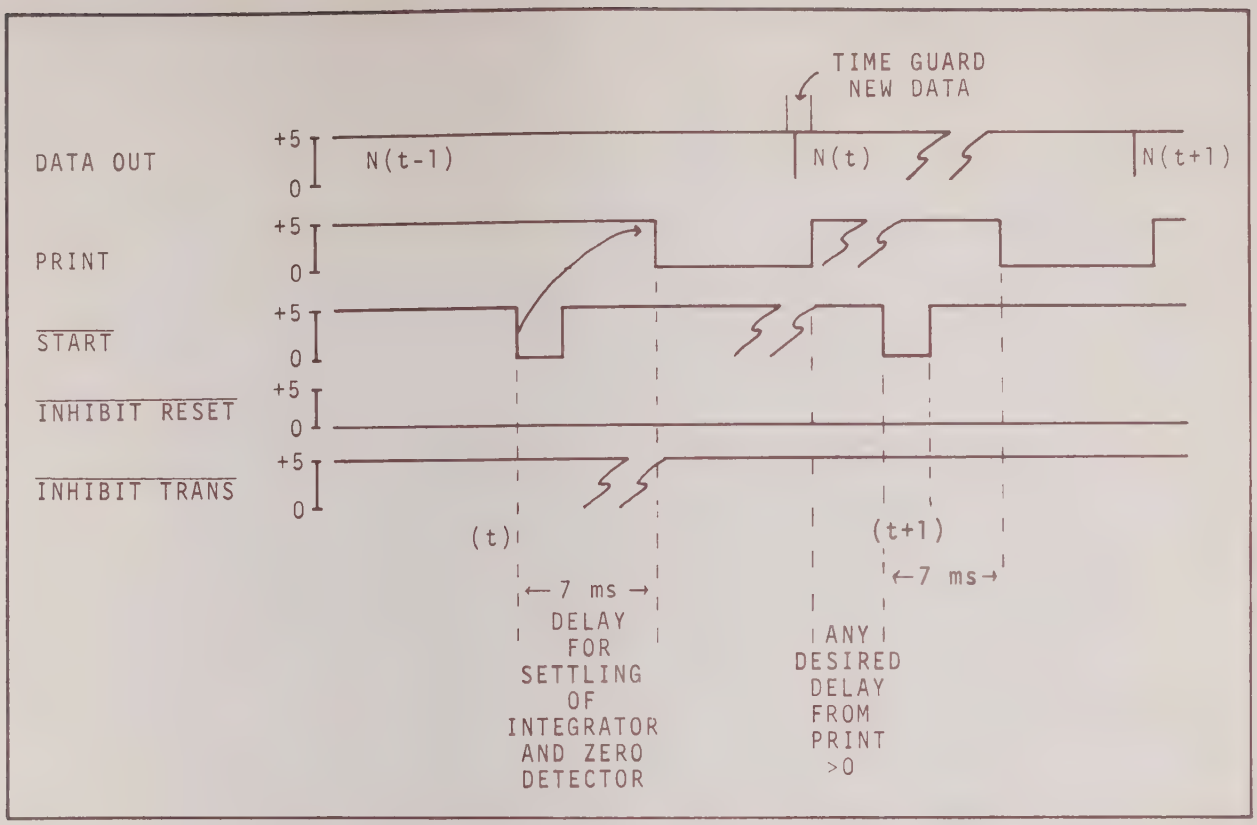

FIGURE 3.5 TIMING DIAGRAM, SAMPLE RATE CONTROL IN ANY POSITION EXCEPT FULL CCW OR FAST

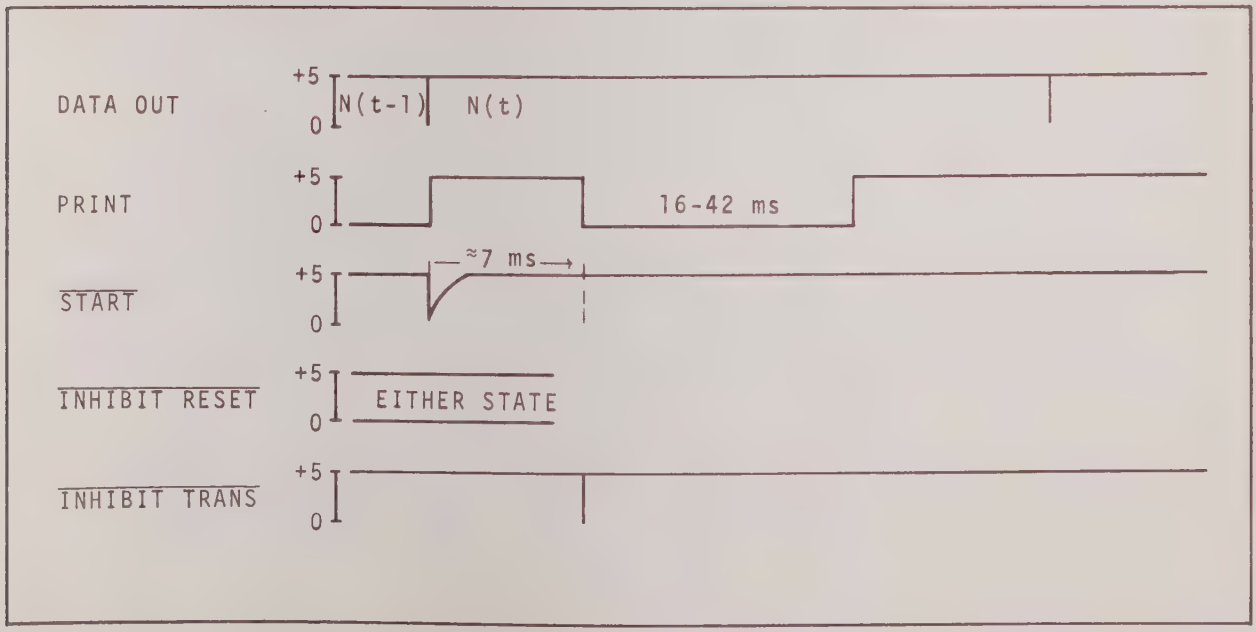

FIGURE 3.6 TIMING DIAGRAM, SAMPLE RATE IN FAST

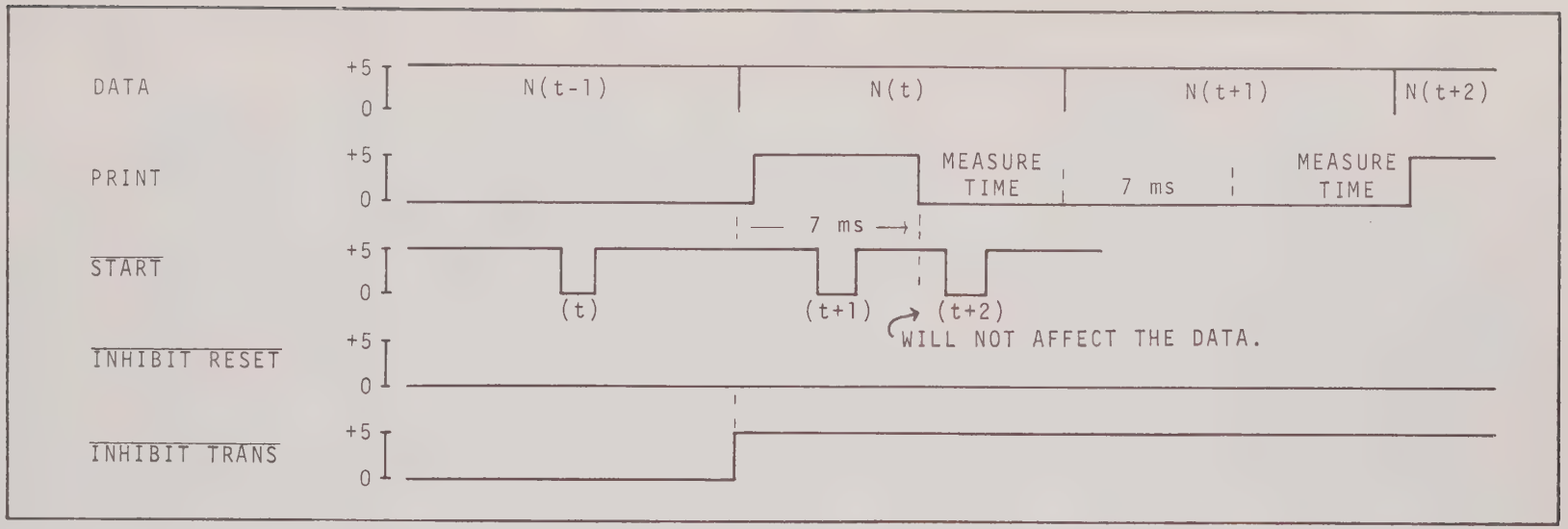

FIGURE 3.7 TIMING DIAGRAM, SAMPLE RATE ANY POSITION, EXCEPT FAST

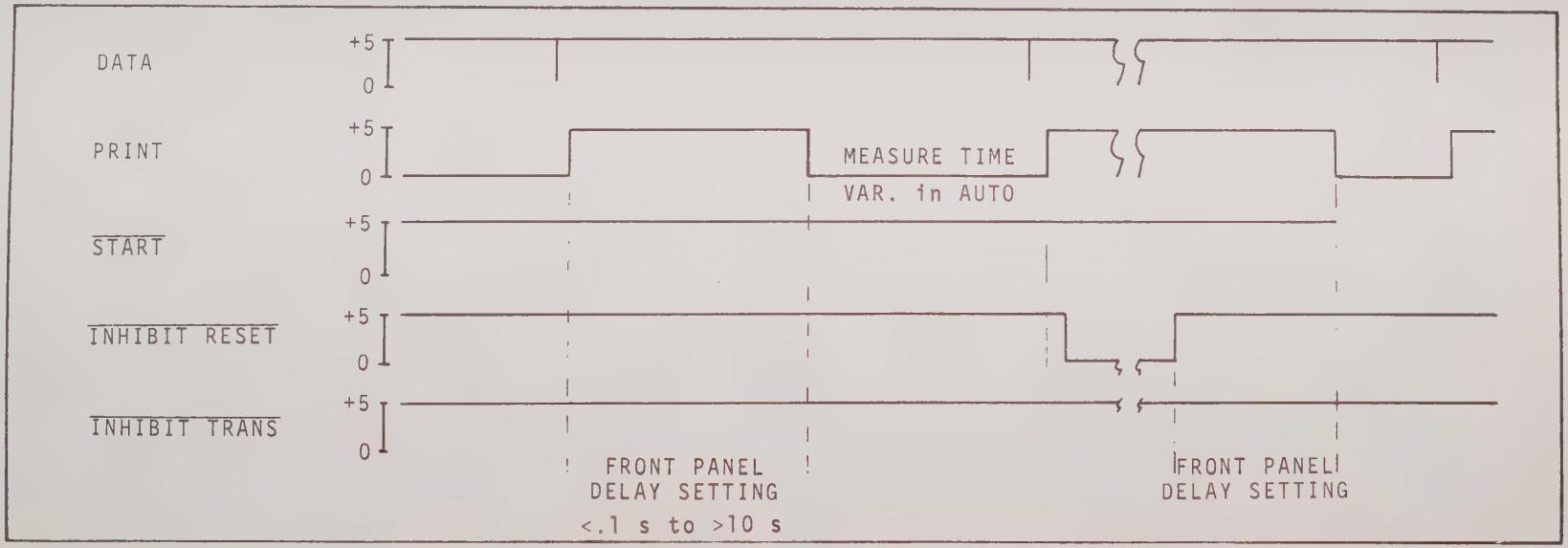

FIGURE 3.8 TIMING DIAGRAM, SAMPLE RATE NOT FAST, NOT HOLD

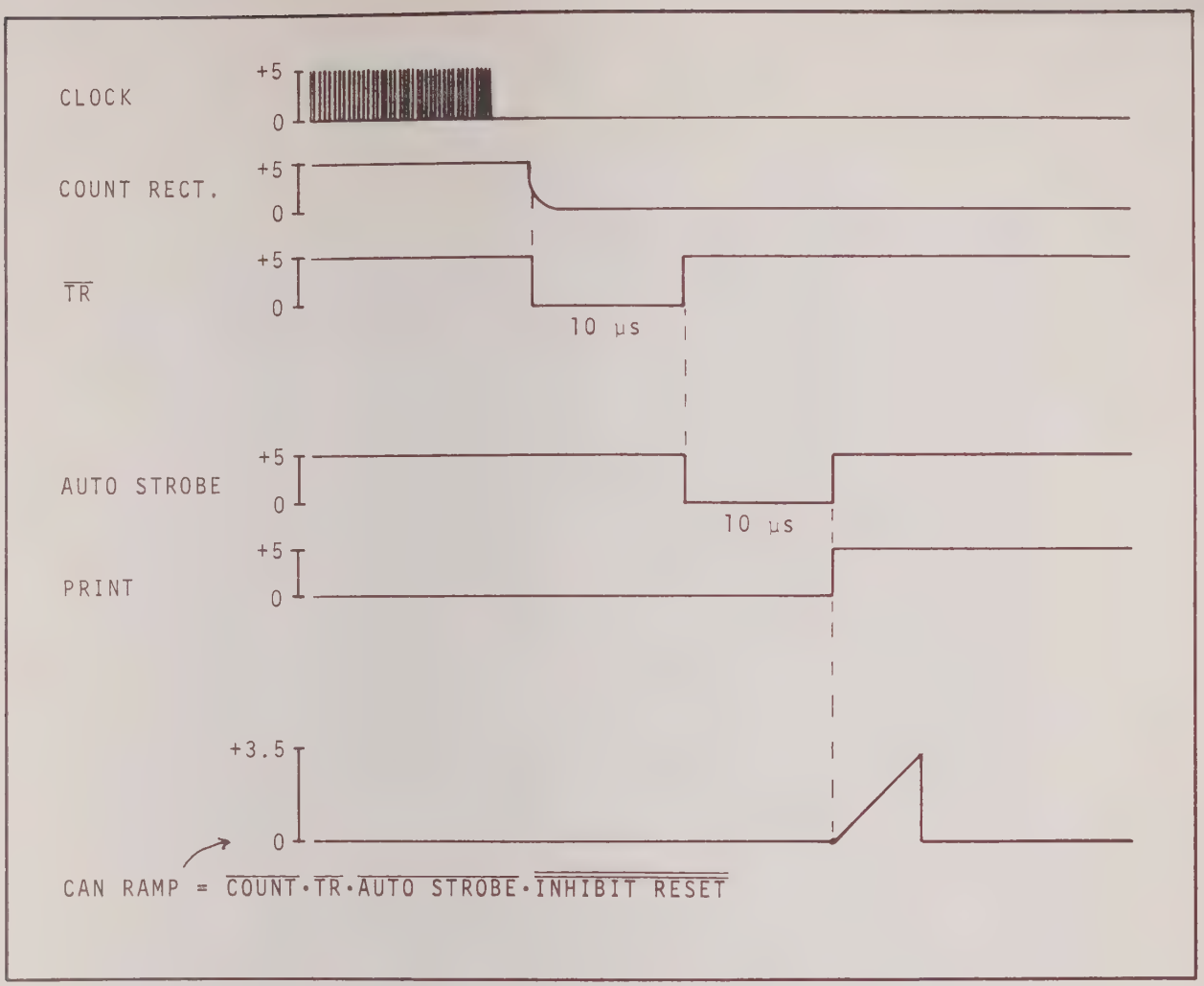

FIGURE 3.9 TIMING DIAGRAM, GENERAL

3.7 ACCEPTANCE TEST PROCEDURE

This test procedure permits functional checkout of the operating characteristics and specifications of the Model 7110A Digital Multimeter. The ambient temperature should be +23 ±1°C and the line voltage 115 V ac. Table 4.1 Calibration Equipment lists test equipment with sufficient specifications for this procedure.

TABLE 3.6 ACCEPTANCE TEST

INPUT IMPEDANCE

Range Input	Source Resistance	Deviation
+10.0000	0→1 MΩ	+1 to -10

INPUT CURRENT

Range	Limit at 25°C
.1 VDC	±25 pA

ISOLATION

Hi Term	Lo Term	Test Volts	Max I
PRI.(NON.OP.)	CASE	±500	5 µA
DIG.COM.	CASE	±500	5 µA
DIG.COM.	GUARD	±1500	15 µA
GUARD	CASE	±1000	10 µA
SIG.HI + LO	GUARD CASE	±1000	10 µA

OVERVOLTAGE

Range	Input Volts	Input Term
.1 VDC	±1100	HI to LO
ANY KΩ	±1000	HI to LO
		Ω CURRENT
1 VAC	750 V,200 Hz	HI to LO
1000 VDC	+1100,5 MIN	HI to LO

AUTORANGE

0→1.0 VDC
0→10 VDC
0→100 VDC
0→1000 VDC
1000 VDC→0

With filter in, look for hunting with steps to voltage between 70 and 140.

TEST

+ 10.0000±1

TABLE 3.6 ACCEPTANCE TEST (Cont'd)

VOLTS DC	
Range Input	Deviation
10 VDC	
SHORT	±1
±1.00 mV	±1
±10.0 mV	±1
±100.0 mV	±1
±1.0000 V	±1
±2.0000 V	±1
±4.0000 V	±3
±7.0000 V	±5
±10.0000 V	±6
±13.0000 V	±8
1 VDC	
SHORT	±1
±.10 mV	±1
±.5 V	±4
±1.0 V	±6
.1 VDC	
SHORT	±5
±.010 mV	±5
±50.0 mV	±8
±100.0 mV	±10
100 VDC	
±10 V	±1
±100 V	±6
100 VDC	
±100 V	±1
±1000 V	±6

DC RATIO	
E(Ref)=10.0000	Range=10
SHORT	±1
±10.0 mV	±1
±10.0 V	±6
E(Ref)=11.0000	Range=10
SHORT	±1
±11.0 mV	±1
±11.0 V	±6

TABLE 3.6 ACCEPTANCE TEST (Cont'd)

DC RATIO (Cont'd)

E(Ref)=9.0000 Range=10	
SHORT	±1
±9.0 mV	±1
±9.0 V	±6
E(Ref)=5.0000 Range=10	
SHORT	±3
±5.0 mV	±3
±5.0 V	±8
E(Ref)=2.000 Range=10	
SHORT	±6
±2.0 mV	±6
±2.0 V	±10

AC VOLTAGE OPTION 02

Input Volts	Freq. Hz	Deviation
	1 Volt Range	
0.00000	200	±13*
0.00010	200	±13*
0.00100	200	±13*
0.10000	200	±15
0.50000	200	±75
1.00000	200	±125
1.30000	200	±150
1.00000	30	±125
1.00000	60	±125
1.00000	1 k	±125
1.00000	5 k	±125
1.00000	15 k	±125
1.00000	30 k	±125
1.00000	60 k	±125
1.00000	100 k	±125
	10 Volt Range	
10.0000	200	±125
10.0000	1 k	±125
10.0000	5 k	±125
10.0000	15 k	±125
10.0000	30 k	±125
10.0000	60 k	±125
10.0000	100 k	±125

TABLE 3.6 ACCEPTANCE TEST (Cont'd)

AC VOLTAGE OPTION 02 (Cont'd)

Input Volts	Freq. Hz	Deviation
	100 Volt Range	
100.000	200	±125
100.000	1 k	±125
100.000	5 k	±125
100.000	15 k	±125
100.000	30 k	±125
100.000	60 k	±125
100.000	100 k	±125
	1000 Volt Range	
750.00	200	±88
750.00	1 k	±88
750.00	5 k	±88
750.00	15 k	±88
750.00	30 k	±88
750.00	60 k	±88
750.00	100 k	±88

* No published specification

RESISTANCE OPTION 03

Resistance	Deviation
10 MΩ Range	
10 MΩ	±15
5 MΩ	±10
1 MΩ	±5
SHORT	±5
1 MΩ Range	
1 MΩ	±11
100 kΩ	±6
100 KΩ Range	
100 kΩ	±11
10 KΩ Range	
10 kΩ	±11
1 kΩ	±6
100 Ω	±5
1 KΩ Range	
1 kΩ	±11

TABLE 3.6 ACCEPTANCE TEST (Cont'd)

RESISTANCE OPTION 03 (Cont'd)	
Resistance	Deviation
.1 KΩ Range	
100 Ω	±19
10.0 Ω	±11
1.00 Ω	±10
0.10 Ω	±10
0.010 Ω	±10
SHORT	±10

3.8 SYSTEMS OPERATION

The Model 7110A is directly suitable for systems operation and may be custom modified to fit any operating configuration. With the standard Rear Input (08), Digital Outputs (05), and Remote Programming (06) options, the Model 7110A is able to perform in any data acquisition or computer-controlled system. The special systems options are described in the option portion of this manual. Interfacing the standard Digital Outputs (05) and Remote Programming (06) options to one particular system is explained in the following sections.

3.8.1 Computer Automated Test System (CATS) Interface

The Model 7110A Digital Multimeter is utilized by Systron Donner's Model 3600 Series Computer Automated Test System (CATS) to provide rapid and accurate digital multimeter measurements of signals from devices under test. The CATS Block Diagram, Figure 3.10, shows the position of the Multimeter in the test system as part of the Measurement/Analysis section. The device under test is coupled to the Multimeter via Adapter Unit, SD 3689, and the Connection Panel, SD 3681, containing the Multimeter Relay Tree Cards, SD 3648.

To couple the Model 7110A to the CATS Computer (PDP-11), an Interface Chassis has been devised called a Multimeter Driver, SD 3632. Interface bus buffers, input scan gates, output registers, and address circuitry comprise this basic SD 3632 Multimeter Driver. Figure 3.11 shows a simplified version of this driver and its position in relation to the UNIBUS and the DMM.

The Interface Bus Buffer section of the Driver board isolates the A2 Scan Gate and A2 Output Register from the UNIBUS lines terminated at EE2, ED1, ED2, and EC1. The control section of the Bus Buffer, NOT-AND Gates B1 and B2, accepts control signals from the UNIBUS Master and activates the proper QUAD LATCH, F8, and control gates, F9, in the A2 Output Register to select the associated Model 7110A REMOTE Function Line.

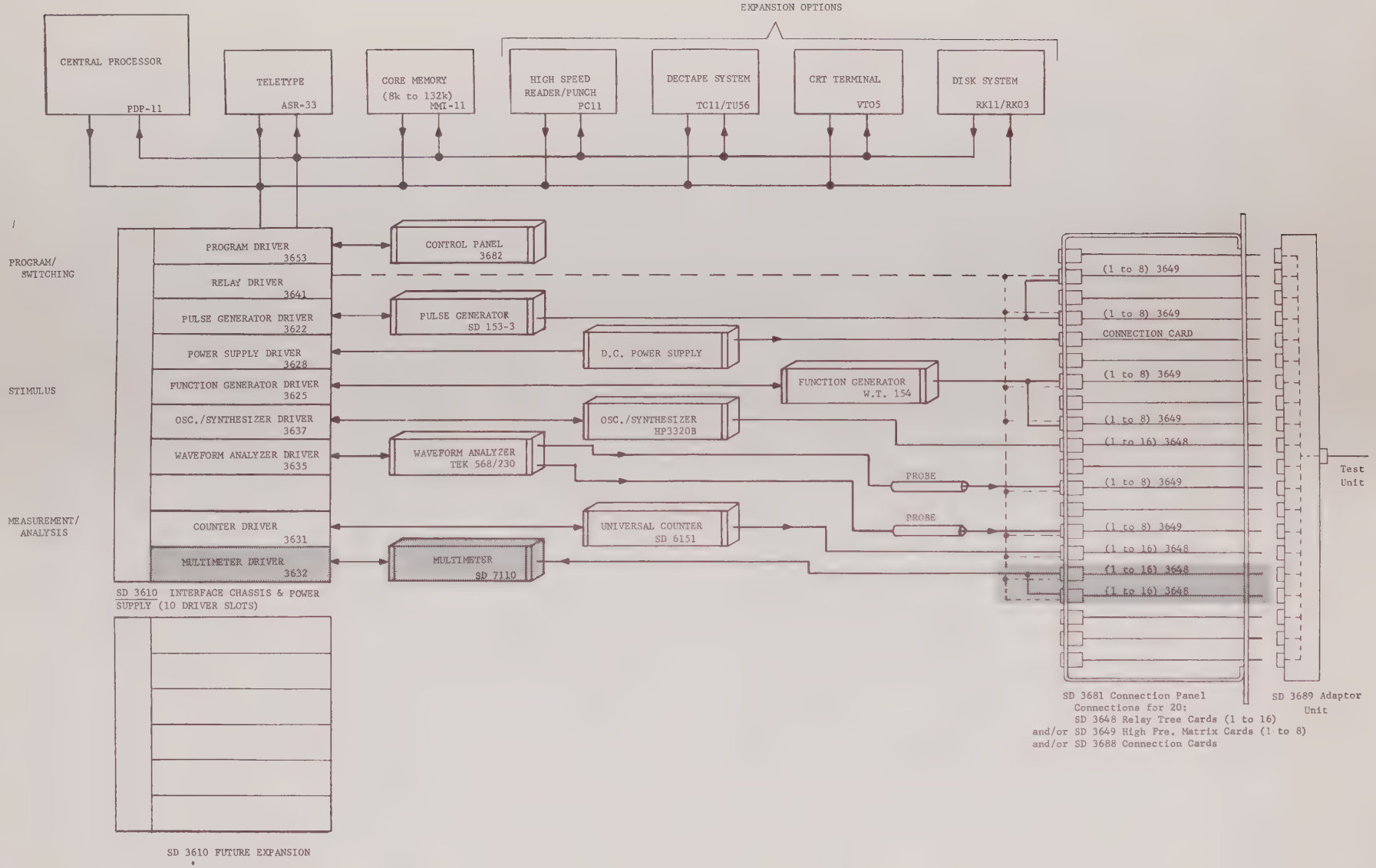

FIGURE 3.5 BLOCK DIAGRAM, CATS SYSTEM.

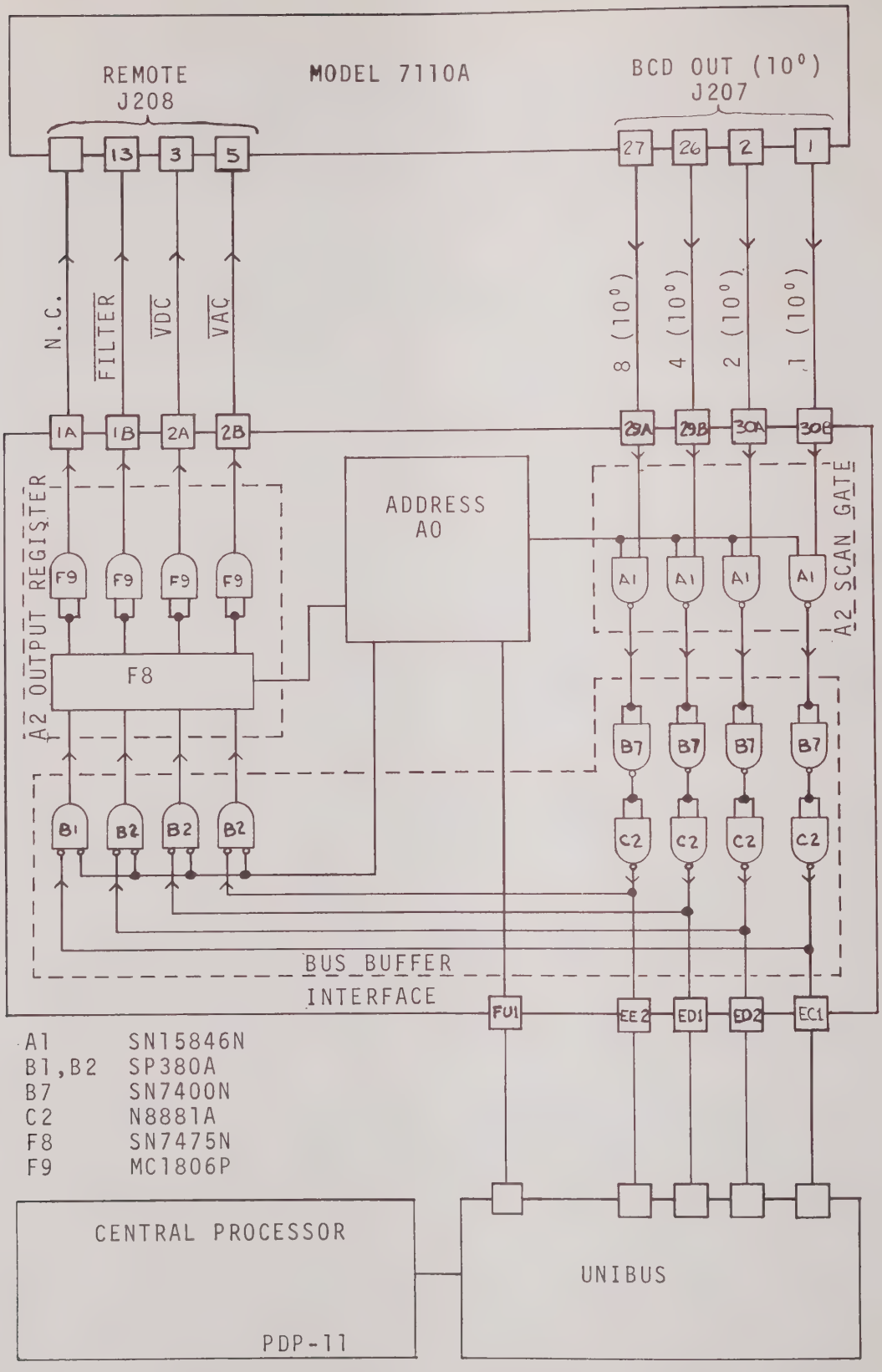

FIGURE 3.11 PARTIAL INTERFACE SCHEMATIC, CATS SYSTEM

The A2 Output Register acts as a buffer and provides proper levels to match the Remote Connector Input circuits. The register is controlled by the Address A0. If the UNIBUS Master calls a particular range, F8 is strobed on, as well as B1 and B2 with A1 Scan Gates data out strobed off.

The A2 Scan Gates act as a buffer control for the Model 7110A BCD output. The A2 Scan Gates are activated by the Address A0 when the UNIBUS Master elects to read data from the DMM. In the Read-Data mode, the Address A0 strobes off Bus Buffer Gates B1, B2, and A2 Output Register F9, F8.

Standard BCD and Remote options are used in this interface system. The interface for any system may be built into the Model 7110A or optional nonstandard Remote and BCD configurations may be ordered.

3.9 APPLICATION NOTE

The lowest full scale resistance range on the Model 7110A DMM; namely, .1 KΩ with Option 08 installed, may be extended to lower full scale resistance ranges with the use of the dc/dc RATIO operating mode. To accomplish this range extension, an external resistance standard (R_S) and a voltage source (E) are all the additional equipment needed. Select the RATIO FUNCTION and the .1 RANGE pushbuttons and connect the 7110A as shown in the figure below.

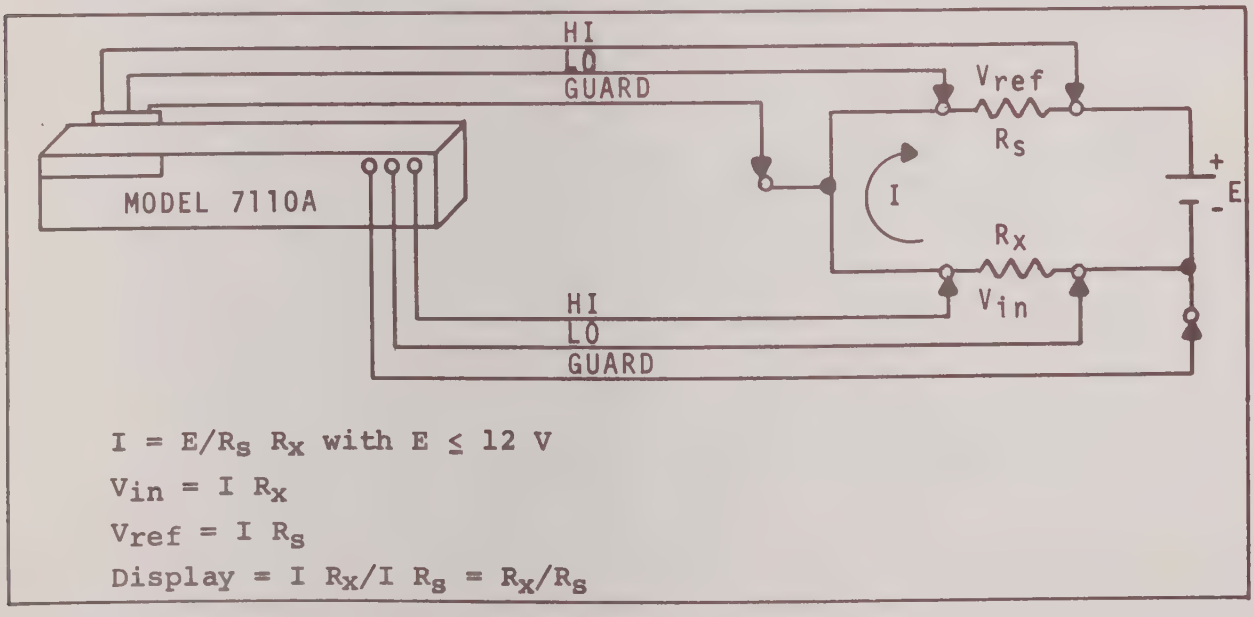

$I = E/R_S\ R_X$ with $E \leq 12$ V

$V_{in} = I\ R_X$

$V_{ref} = I\ R_S$

Display = $I\ R_X / I\ R_S = R_X/R_S$

FIGURE 3.12 LOWER FULL SCALE Ω RANGE SETUP

Example: For 10 Ω full scale: Select the .1 RANGE. Let E = 12, R_S = 1 kΩ. Then R_X = 10 Ω yields, R_X/R_S = 10/1000 = .01, kΩ full scale, etc.

CHAPTER 4
MAINTENANCE AND CALIBRATION

4.1 INTRODUCTION

This section contains instructions on how to maintain and calibrate the Model 7110A Digital Multimeter. Factory service, routine maintenance, printed-circuit board repair, and calibration are included.

4.2 FACTORY SERVICE

When the instrument requires service, the nearest Systron-Donner representative should be contacted. He can provide field service or arrange for factory returns when necessary. Address all inquiries on operation or application to your nearest sales representative; or, Sales Manager:

SYSTRON-DONNER CORPORATION
CONCORD INSTRUMENT DIVISION
10 Systron Drive
Concord, California 94518
Phone: (415) 682-6161
TWX: 910-481-9479
Cable: SYSTRONDONNER

Specify both model and complete serial number in all correspondence.

4.3 ROUTINE MAINTENANCE

A regular program for routine maintenance and inspection every twelve months is recommended for this unit. As part of these regular procedures, the instrument should be checked in the following manner:

1) Disconnect ac power and remove the top and bottom covers.
2) Make a thorough visual inspection of all wiring and cables.
3) Check for physical integrity of all components, loose solder connections, leakage of insulation compounds, and general physical damage. When a printed-circuit board contains integrated-circuit packages, ensure that all packages are firmly mounted. Never unnecessarily remove and replace a package.
4) Check all switches and connectors for loose or broken terminals, loose or sticking shafts, etc.
5) If the internal panel surfaces and components have an excessive amount of dust deposited on them, use a low-pressure stream of clean, oil-free air to remove the foreign material. After initial air cleaning, wash all analog printed-circuit boards and Mother board in a bath of distilled water. Place chassis and P.C. boards in a drying oven for 1 or more hours at 50°C to 70°C.

CAUTION

Do not clean printed circuit boards or small internal components with a stiff brush or solvents, since damage to the circuits may result. Also, a high-powered vacuum cleaner should not be used on small internal components.

6) Wipe the external surfaces of the instrument with a soft damp cloth to remove dirt, fingerprints and other foreign material.

7) Clean the polarizing filter window using only a soft cloth and warm soapy water: ABRASIVES OR SOLVENTS WILL DAMAGE THE FILTER. If desired, the filter may be removed for cleaning (remove trim and slide filter out of the end). The surfaces of the indicator tubes may be cleaned with a damp cloth at this time.

8) Perform the Calibration Procedure; if performance does not match or exceed the specifications listed in Chapter 1 of this manual, corrective maintenance is in order.

4.4 PRINTED-CIRCUIT BOARD REPAIR

When replacing integrated circuits or other electronic components soldered to printed-circuit boards, the procedures indicated below must be followed or damage to the board may result:

1) Determine by troubleshooting techniques, which integrated circuit or discrete component(s) has failed.

2) Remove the defective component(s) from the board by cutting the pins or leads with a small diagonal clipping tool. (Always remove and replace the entire component.)

3) Apply heat (40-50 W soldering iron) sparingly to each of the cut pins or leads and remove from the board; clean the hole(s) with a toothpick or solder suction tool.

4) Form the tinned leads of the replacement part and insert in the printed circuit holes; solder, then trim leads to extend 1/16-inch beyond the back surface of the board. (Use only 63-37 solder with maximum 1/16-inch diameter.)

5) Clean all dirt and solder-flux from the printed circuit traces by liberal application of isopropyl alcohol. Cleanse and dry analog P.C. boards as indicated in Section 4.3, paragraph 5.

4.5 CALIBRATION

WARNING

The WIRING and exposed metal parts of the GUARD are at signal or GUARD terminal potential. Insulated adjusting tools should be used throughout the calibration procedure, and especially when making the high frequency compensation adjustments on the A9, AC Converter board.

Calibration of the Model 7110A Digital Multimeter requires test equipment of equal or greater accuracy than the equipment listed in Table 4.1. The step-by-step calibration procedure which follows Table 4.1 should be performed in listed order since earlier steps may effect later ones.

TABLE 4.1 CALIBRATION EQUIPMENT FOR MODEL 7110A

Type	Required Characteristics	Suggested Equipment
1) Autotransformer	0-130 V ac	VARIAC; Model W8MT3VM, General Radio
2) Digital Voltmeter	.01%	Model 7004A Systron-Donner
3) Oscilloscope	1 mV/cm sensitivity	Model 533 w/Type W plug-in, Tektronics
4) DC Voltage Calibrator	.1 ppm accuracy, ±1 ppm linearity	Model 720A Kelvin-Varley Voltage Divider,
	0-1111.1110 V .1 ppm accuracy	Model 335A DC Voltage Standard, Fluke (2 units required to set up RATIO)
	±.001% of output +.5 µV, .2 ppm resolution	Model 750A Reference Divider, Fluke
	Traceable to NBS	Model 121 Standard Voltage Reference, Eppley Laboratory
5) AC Voltage Calibrator	0.100000 mV to 1099.999 V, ±.05% of setting +0.005% of range +50 µV	Model 745A AC Calibrator & 746A High Voltage Amplifier, H.P.
6) Resistance Standard	.000001 kΩ-10 MΩ, error < 50 ppm	Model RS 925C Decade Resistance Standard, ESI or 1063A

4.5.1 Preliminary Checks

Check the RANGE and FUNCTION combinations listed in Table 4.2 for proper annunciator and decimal point indication.

TABLE 4.2 PRELIMINARY CHECKS

Range & Function	Annunciator	Decimal Position
.1 VDC	mVDC	abc.def
1 VDC	mVDC	abcd.ef
10 VDC	VDC	ab.cdef
100 VDC	VDC	abc.def
1000 VDC	VDC	abcd.ef
10,000 VDC	*	abcdef
No AC board	* added to VAC symbols below	
.1 VAC	*	abcdef
1 VAC	VAC	a.bcdef
10 VAC	VAC	ab.cdef
100 VAC	VAC	abc.def
1000 VAC	VAC	abcd.ef
10,000 VAC	*	abcdef
No KΩ board	* added to KΩ & MΩ symbols below	
.1 KΩ	KΩ	.abcdef
1 KΩ	KΩ	a.bcdef
10 KΩ	KΩ	ab.cdef
100 KΩ	KΩ	abc.def
1000 KΩ	KΩ	abcd.ef
10,000 KΩ	MΩ	ab.cdef
.1 RATIO	RATIO, 10^{-3}	ab.cdef
1 RATIO	RATIO	.abcdef
10 RATIO	RATIO	a.bcdef
100 RATIO	RATIO	ab.cdef
1000 RATIO	RATIO	abc.def
10,000 RATIO	*	abcdef
TEST	-	ab.cdef
10,000 TEST	*	ab.cdef

Check the SAMPLE RATE control for a stationary reading in the HOLD position; an adjustable sample rate from 1 sample per 10 seconds to 10 samples per second in the variable position; and in the most counterclockwise detent position, a much faster rate than in the adjustable range. Note, that in the HOLD-SINGLE position, the pushbutton will provide a single reading when depressed.

* Indicates invalid RANGE & FUNCTION selection.

4.5.2 Power Supply Voltage Adjustment

Remove the calibration cover and set A6 or A7 on an extender board. The negative floating power supply for the Ω CURRENT SOURCE is measured with Item 2, Table 4.1 across A10C6 or between A7(1,A) and A7(3,C). The level should be -17.5 to -18.0 V dc. This supply is adjusted by removing A10 jumpers 12 and 13. Removing jumper 13 lowers the voltage about .7 V, removing jumper 12 raises the voltage about 0.5 V.

The positive floating power supply for the current source is measured across A10C5 or between A7(1,A) and A7(2,A). The level should be +17.2 to +18.3 V dc.

The positive and negative main power supplies are measured between A6(22,Z) and A6(21,Y), and between A6(22,Z) and A6(20,X) respectively. The value of voltage should be within 1 V of 20 V. Adjustments are made by shorts which can be added or removed from around A6(R28,R29,R33,R34), and provide a total range of adjustment greater than 8%. Voltage is raised by removing shorts or lowered by adding shorts.

With the SIGNAL INPUT HI and LO terminals shorted, the VDC FUNCTION selected, and the 10 RANGE selected, the voltage difference between terminals 29 and 30 should be less than 0.5 mV. Adjust this voltage with A10-R28.

4.5.3 VDC Adjustments

See schematics and assemblies for boards A2, A3, A4, and A6. Test equipment includes Items 2 and 4 of Table 4.1. Remove extender, replace cover.

Check and reset, if required, the reference inverter amplifier balance. Technique: Set the FUNCTION switch to RATIO. Short the HI and LO EXT REF INPUT on the rear panel. Short A6TP4 to A6TP1 and connect a voltmeter between A6TP3 and A6TP1. Adjust RATIO ZERO to obtain a reading as near zero as possible (less than 100 μV). Alternatively, the Model 7110A input and detection circuitry can be used as a null meter for such measurements by selecting the .1 RANGE on RATIO function, shorting the input and adjusting the mV ZERO panel control to give a flashing polarity indication, then, connecting the HI terminal to A6TP3 and adjusting RATIO ZERO to give the flashing sign and a large meaningless number.

Adjust the external reference buffer amplifier offset by removing A6TP4 to A6TP1 short and connecting A6TP4 to the HI INPUT terminal. Set the instrument to .1 VDC range. With a short applied between the HI and LO RATIO INPUT, adjust EXT REF ZERO to read the least possible voltage (less than 30 μV).

Adjust the external reference buffer gain and common mode rejection by connecting a 10 V dc standard voltage to the RATIO INPUT, and the HI input terminal of the instrument to A6TP4. Alternately connect the high, then the low terminal of the external reference supply to the SIGNAL INPUT LO connection of the

instrument and alternately adjust GAIN and CMR to give a 10.0000 reading. Continue this operation until no further change in reading is noted when the connection is changed. This adjustment can also be made by connecting one standard voltage source to the SIGNAL INPUT, and a second standard voltage source to the RATIO INPUT. Set FUNCTION to RATIO, RANGE to 10; then alternately switch the SIGNAL INPUT LO from RATIO INPUT HI to RATIO INPUT LO, making the adjustments for GAIN and CMR as described above to obtain a reading of 1.00000 RATIO.

The temperature coefficient of the internal reference voltage supply is changed by the setting of A6R11. Adjustment of this control is carried out initially with a warm air gun supplying heat to raise the temperature of all components an equal amount. If the instrument is set to measure a stable external voltage source; and the A6 board heated uniformly by a warm air source, near 70°C; and if the instrument reading increases with the temperature; then, the TC of the power supply is negative. To secure a more positive coefficient, the current in the reference diode should be increased. This can be achieved by counterclockwise rotation of the TC control.

Check and reset, if required, the Integrator Zero detector adjustments. Technique: Remove the A3 Input Amplifier from the instrument to ensure a zero current into the A4 Integrator Zero detector board. Measure the output voltage of the integrating amplifier in the HOLD mode with a sensitive voltmeter, and adjust the INT ZERO to give a reading less than 100 μV. (The left-hand end connection of A4C8 is a convenient place to make connection to the output of the amplifier and there is a nearby ground terminal.) Then adjust DET ZERO to give flashing ± sign. Reinstall the Input Amplifier assembly and allow the unit to come to a stable temperature. Short the instrument input and select the .1 VDC range. Adjust the front panel mV ZERO to give a flashing + or - sign.

Select the 10 VDC range and alternately apply + and -1 mV. Adjust the THRESHOLD control and the variable differential capacitor, A6C3, to give a + or - 10 count reading. Recheck with an input short for a flashing + or - sign and a zero or 1 reading. Slight Adjustment of the DET ZERO is necessary to achieve the flashing sign. This adjustment may be made with the board on an extender or in the unit. To adjust the symmetry with A6C3, the board must be removed from the instrument during which time a small change is made in the capacitor setting. The board is then reinstalled to test. Wait approximately 1 minute for the unit to stabilize if the operation of turning the instrument off, removing the A6 board, adjusting A6C3, reinstalling A6, and turning the instrument back on, is carried out quickly. The balance between the two polarity readings should be made as equal as possible since it will become more sensitive to unbalance when low-voltage external reference voltages are used.

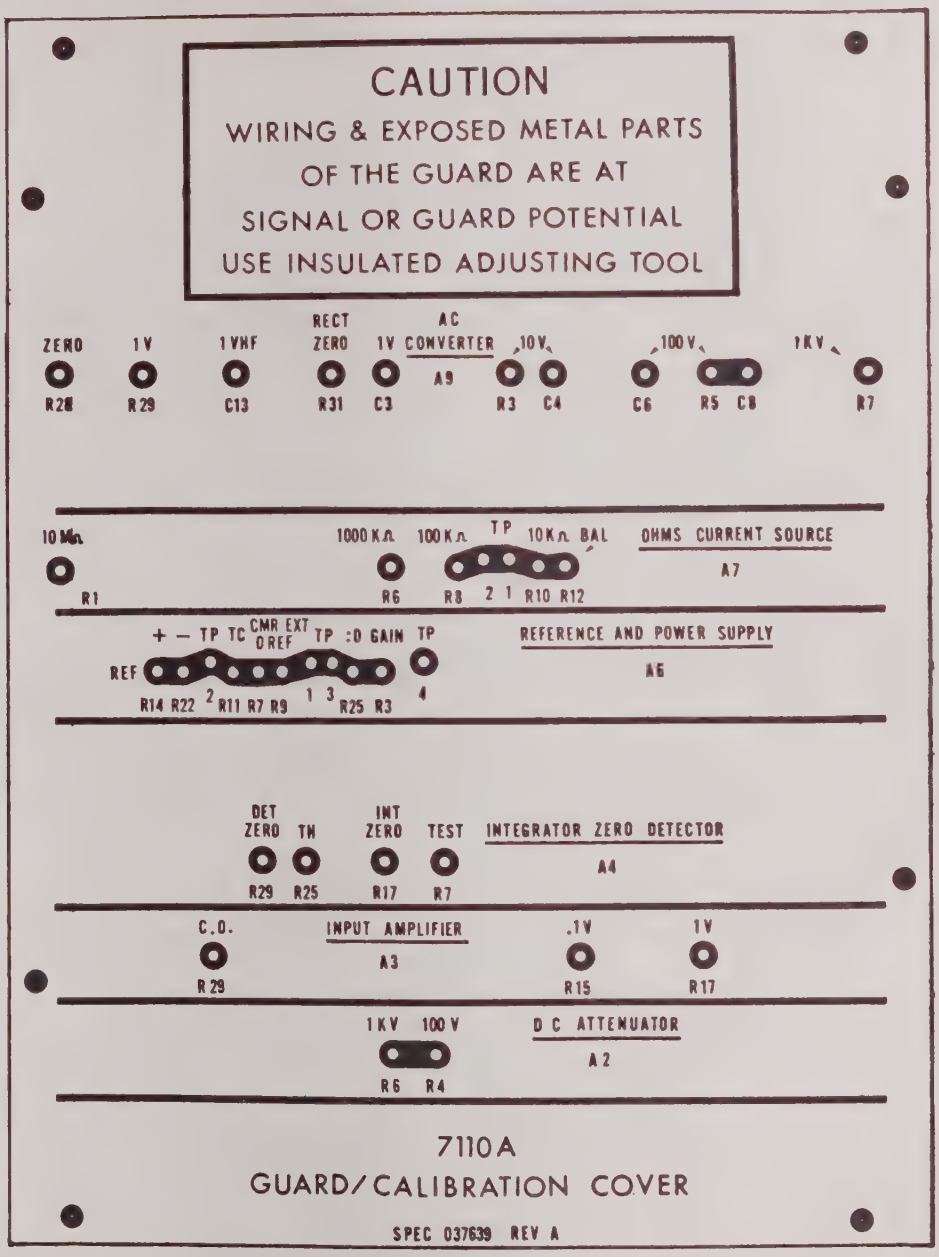

FIGURE 4.1 MODEL 7110A GUARD/CALIBRATION COVER #037639A

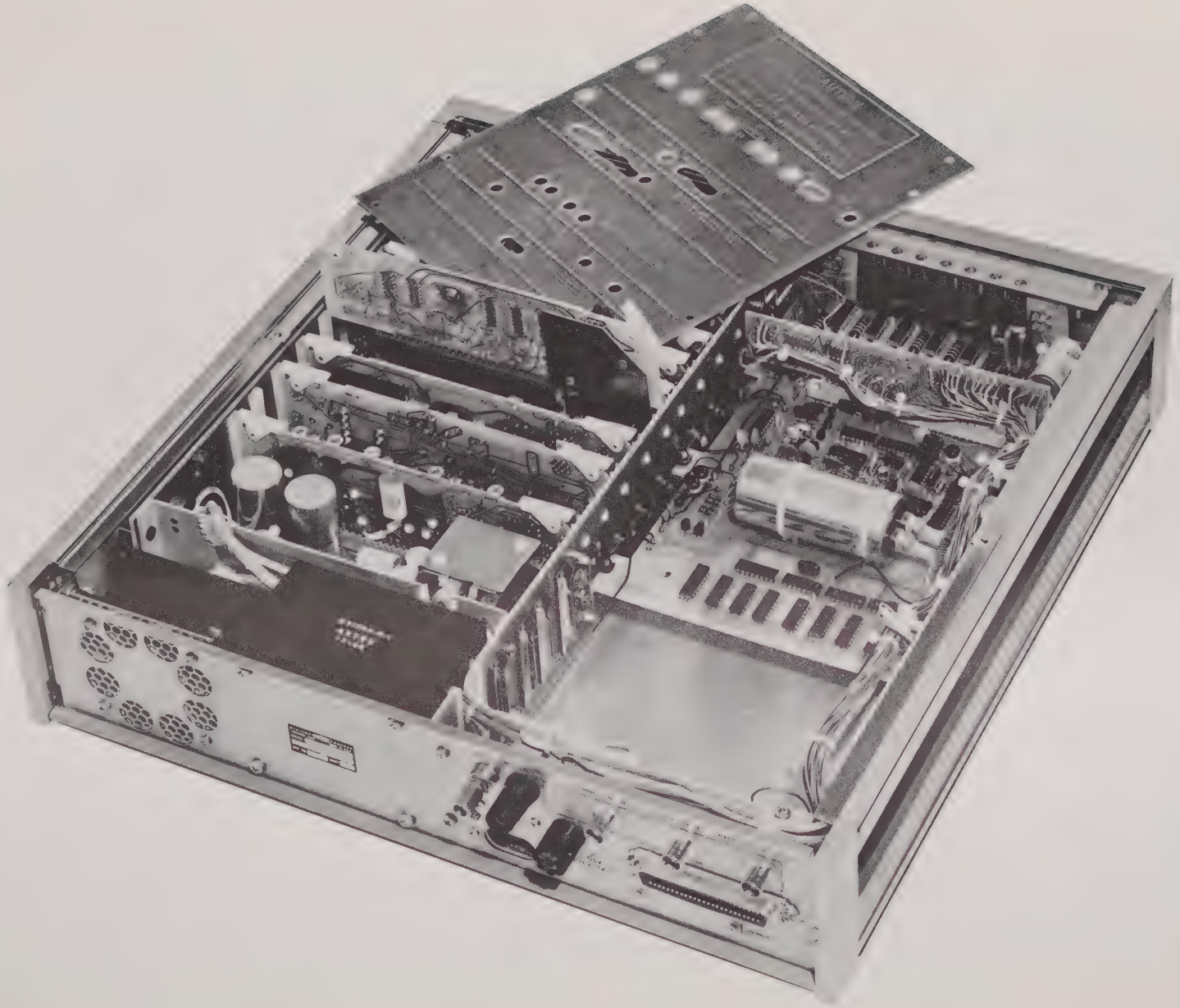

FIGURE 4.2 INTERIOR TOP REAR VIEW OF MODEL 7110A

Press the TEST FUNCTION button and adjust the TEST control, A4R7, for a reading of +10.0000 ±1 digit. A4R8 may need to be shorted or have a short removed if component aging has caused A4R7 to require setting at an end.

Set the instrument on 10 VDC and apply +10.0000 V dc. Adjust +REF, A6R14, to obtain a reading of +10.0000 VDC. Apply -10.0000 V dc and adjust -REF, A6R22, for a reading of -10.0000 VDC.

Set the instrument on 1 VDC and apply +1.00000 V dc Adjust 1 V, A3R17, to obtain a reading of +1000.00 mVDC. Check for equal magnitude with -1.00000 V dc applied.

Short the input and select .1 VDC. Check for alternating polarity signs and readjust the front panel mV ZERO control if required. Remove short and apply +.100000 V dc and adjust .1 V, A3R15, to obtain a reading of +100.000 mVDC. Check for equal magnitude with -.100000 V dc applied. 5-count deviations are not out of specification and the stability of the ZERO is generally the reason for nonequality of the .1 VDC setting.

Check the effect of the various SAMPLE RATE switch positions on the reading with + and -0.100000 V dc applied. The reading should not change more than 2 digits between the slower rates and the fastest rate.

Set the instrument on 100 VDC and apply +100.000 V dc. Adjust 100 V, A2R4, to obtain a reading of +100.000 VDC.

Set the instrument on 1000 VDC and apply +1000.00 V dc. Adjust 1 kV, A2R6, to obtain a reading of +1000.00 VDC.

4.5.4 Auto Range Adjustments

Select 10 VDC on the front panel and apply successively higher voltages (10, 11, 12, 13, 14, 15, 20, 30, 40, and 50 volts) of both polarities. Observe that the reading does not decrease with an increase in input voltage. For inputs with magnitude greater than 13 V dc, the reading should be somewhat greater than 13.0000. If the unit fails this test, the input amplifier should be analyzed for faulty elements.

With the unit in AUTO RANGE and VDC FUNCTION, apply various voltages of either polarity in the range 0-1000 V dc, and observe that valid ranges are selected. No number greater than or equal to 130000 should be observed as a final reading, and no number less than 010000 should be observed except on .1 VDC.

4.5.5 KΩ Adjustments (Option 03)

Install A7 on a printed circuit extender board. Connect a calibration standard 10 MΩ resistor, Item 6 of Table 4.1, between the front panel Ω CURRENT SOURCE HI and LO terminals and connect the SIGNAL INPUT HI and LO terminals to the standard's voltage terminals. Set FUNCTION switch to KΩ and RANGE switch to 10,000.

Connect a shorting jumper from the lower end of A7R11 to A7TP2. Adjust the BAL, A7R12, control to achieve minimum reading. Remove short.

The RVL-3 has been factory adjusted and should be recalibrated only if it has been replaced or has drifted out of specification. Set the 10 MΩ, A7R1, control to its midpoint and add or remove shorts around resistors A7A3 (R6, R5, R4, R3, R2, and R1) to give a reading within ±100 digits of 10.0000 MΩ. Shorting of A7A3R1 should reduce the reading about 75 digits. The other resistors in the set cause changes progressively greater by a factor of 2. After the correct setting of shorts close to 10.0000 MΩ, adjust A7R1 to give a reading of 10.0000 MΩ. Reinstall the A7 board in the unit and attach the Guard/Calibration cover.

Connect in succession, calibration resistors of 1000.00 kΩ, 100.000 kΩ, and 10.0000 kΩ to the input; and with the instrument on the appropriate range, adjust 1000 KΩ, A7R6; 100 KΩ, A7R8; and 10 KΩ, A7R10.

4.5.6 AC Adjustments (Option 02)

Install A9 on a printed circuit extender card and select 1 VAC. Apply 0.50000 mV at 200 Hz to the SIGNAL INPUT HI and LO terminals with Item 5, Table 4.1 standard. Connect the oscilloscope, Item 3, Table 4.1, to the junction of A9U1-pin 6, A9R11, A9CR3, and A9CR4. Adjust RECT ZERO, A9R31, to obtain a symmetrical waveform; time high equal to time low. Disconnect oscilloscope.

Apply 10.00 mV at 200 Hz, and adjust ZERO, A9R28, control to give a reading of 0.01000 VAC. Increase the input to 20.00 mV at 200 Hz and note whether or not the reading increases to approximately 0.02000 VAC. If not, apply 10.00 mV at 200 Hz again and find a second position on the potentiometer which will give a 0.010000 VAC reading. Recheck again with 20.00 mV at 200 Hz applied. For finer adjustment, reduce the input to 1.00 mV, reset ZERO, A9R28 slightly, and check with a 2.00 mV input.

Short the input resistor A9R1 (center of board) and apply an input of 0.50000 V at 200 Hz and note the reading. Change the frequency to 100 kHz and adjust 1 V HF, A9C13, to give the same reading. Scan the frequency band between these two frequencies to determine that the response function does not deviate by more than 20 counts. Component location and the values of A9C12 and A9C19 may need to be changed to achieve the necessary specifications. Remove the short.

Install the board back in the unit and replace the Guard/Calibration cover. Apply 1.00000 V at 200 Hz and adjust the 1 V, A9R29, potentiometer to give a reading of 1.00000 VAC. Change frequency to 100 kHz and adjust 1 V capacitor, A9C3, to give a reading of 1.00000 VAC. Check at various frequencies between 200 Hz and 100 kHz to determine that the response is within 80 digits of 1.00000 VAC. The reading at 100 kHz may be adjusted finer by moving some components, A9R1 and A9R8, away from the board and other components.

Select 10 VAC and apply 10.0000 V at 200 Hz. Adjust 10 V, A9R3 to give a reading of 10.0000 VAC. Change frequency to 100 kHz and adjust the 10 V capacitor A9C4 for a reading of 10.0000 VAC. Check the response at intermediate frequencies for a maximum deviation less than 80 digits. Changing the distributed capacitance between A9R34 and ground can alter the midband response.

Select 100 VAC and apply 100.000 V at 200 Hz to the input. Adjust the 100 V, A9R5, potentiometer for a reading of 100.000 VAC. Change the frequency to 100 kHz and adjust the 100 V, A9C6, capacitor for a reading of 100.000 VAC. Scan the intermediate frequencies and check for a maximum deviation less than 80 digits. For excessive deviation change A9C1 or A9R14, or readjust A9C6. Plot the response function to help in determining which way component values need changing.

Select 1000 VAC and apply 750.00 V at 200 Hz. Adjust 1 kV, A9R7, for a reading of 0750.00 VAC. Change frequency to 100 kHz and adjust 1 kV, A9C8, for a reading of 0750.00 VAC. Check the response at frequencies between 200 Hz and 100 kHz for a deviation less than 60 counts. For excessive deviation, make a compromise adjustment of A9C8 or change the value of A9C2, A9R15, or A9R33.

4.5.7 Remarks

During the calibration procedure, it is helpful to occasionally check some of the original set-up steps since there is some influence on the earlier adjustments. Exercise care during high voltage calibration since the adjusting capacitors are at the input potentials and these are lethal values on the higher ranges.

If the unit contains options not described in this chapter, any necessary calibration procedures will be found in Chapter 6 with the option description.

CAUTION

CLEANING SOLVENTS MAY DAMAGE ALUMINUM ELECTROLYTIC CAPACITORS

Aluminum electrolytic capacitors are inherently susceptible to attack by halogenated hydrocarbon solvents. Industry standards, such as EIA RS-395 and Military Specification MIL-C-39018, caution against their use. Specifications of many major O.E.M. customers specifically forbid the use of halogenated cleaning materials on aluminum electrolytic capacitors.

However, some users will clean printed circuit boards carrying aluminum electrolytic capacitors with trichloroethylene, Freon or other halogenated solvents. A bath in any of these cleaning or degreasing compounds can create serious problems. Should these solvents seep into electrolytic capacitors around their seals, they will attack the internal section and the resultant corrosion will cause the capacitors to fail after a few months.

Compounds containing halogenated hydrocarbon solvents are popular because of their effective cleaning properties and the ease and safety with which they can be handled. Customers may therefore insist on subjecting aluminum electrolytic capacitors to cleaning in these materials. Where this situation exists, the customer should order special units with a supplemental epoxy barrier over the end discs or headers.

As an alternate to the special units, customers should consider inserting electrolytic capacitors on their wiring boards after the boards have been subjected to cleaning with whatever halogenated solvent they may wish to use.

CHAPTER 5
CIRCUIT DESCRIPTIONS, DRAWINGS, AND PARTS LISTS

5.1 INTRODUCTION

This Chapter provides circuit descriptions for the various assemblies in the Model 7110A Digital Multimeter. A general analog to digital description precedes the specific circuit descriptions with the numbered assemblies following the "A" number sequence.

5.2 ANALOG TO DIGITAL CONVERSION

The conversion of the analog input, the unknown voltage, to a number proportional to the input is carried out by the circuitry of the Integrator Zero Detector, A-D Control Logic, Reference, and the Digital Counter. The cycle of conversion is divided into four time periods, the integrator clamped, integrating I_X, integrating a current of same polarity as I_X, and integrating a current of polarity opposite to that of I_X.

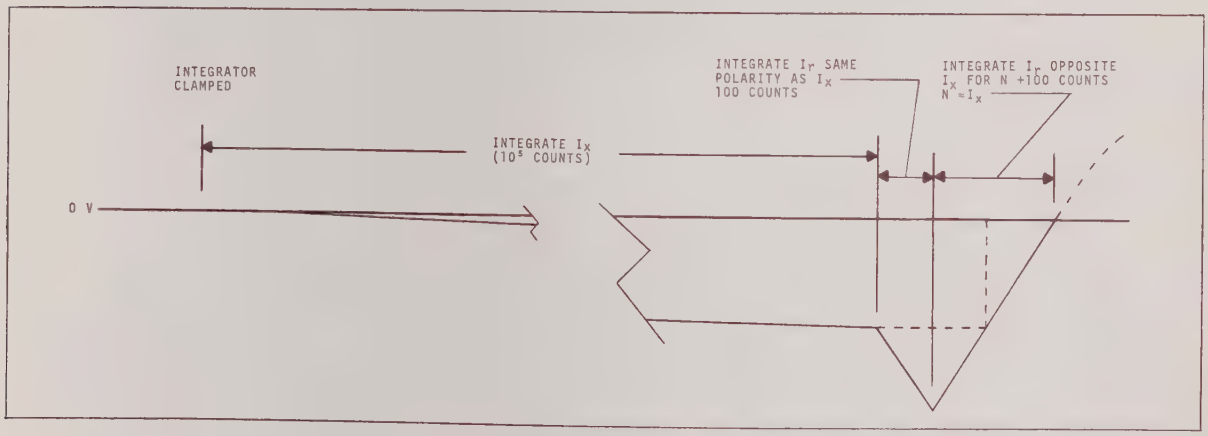

5.1 ANALOG TO DIGITAL CONVERSION CYCLE

The cycle starts with the digital counters set to 100,000 and not counting, the integrator clamped, and the unknown current coupled into the integrator. A signal from the digital count and control section combined with the 6 MHz clock signal triggers an element of the A-D Control Logic which gates the clock on to the digital counter and turns the integrator clamp off.

While the counter accumulates 10^5 counts, I_X will be integrated and the polarity of the integrator output continuously monitored. A pulse from the counter corresponding to 10^5 counts, named Full Scale, triggers an element of the A-D Control Logic, which switches I_X from the integrator to signal low, stores the polarity of the integrator at the end of the period, and connects a reference current to the integrator which will cause the output of the integrator to move from zero output in the same direction as the final output was displaced from zero.

After the digital counter has accumulated an additional 100 counts, a pulse, named Complement, triggers an element of the A-D Control Logic which in turn changes the polarity of the reference current, enables the digital elements of the zero detections circuitry, and selects the appropriate threshold voltage for the comparator corresponding to the determined polarity. When the counter has accumulated an additional 100 counts, the output of the integrator is equal to its value at the time of Full Scale pulse, transient switching pulses have disappeared and the integrator output is approaching zero voltage in a linear fashion, at a constant rate. After this 200th count, the output of the 1×10^2 stage in the count chain is reconnected to the subsequent stages, (it was disconnected at Full Scale pulse), an integration will continue until zero is detected, causing the clock to be gated off. The number stored in the counter at this time is proportional to I_X. After zero detection, the reference current is switched off, I_X is switched back into the integrator, the integrator clamp is turned on, and the A-D Control Logic is returned to the state to receive the next starting signal from the digital count and control section.

5.3 CIRCUIT DESCRIPTIONS

Each section in this Chapter contains assembly information composed of a circuit description, an assembly drawing, a schematic, and a parts list. Only standard assemblies are described. The Block Diagram, final assemblies and final assembly parts list preceed the "A" numbered assembly packages. Table 5.1 Drawing Index Information lists the contents of this chapter.

The sections are numbered in a sequence as follows:

EXAMPLE: A2-1

- A2 — Assembly
- 1 — Page number of the assembly

TABLE 5.1 DRAWING INDEX

Ref	Description	Dwg #	Page #
	Block Diagram	7-03763101	5-5
	Test Assembly	037637	5-6
	Chassis Assembly (Sheet 1 of 2)	037638	5-7
	Chassis Assembly (Sheet 2 of 2)	037638	5-8
	Front Panel Assembly	037239-4-1	5-9
	Input Guard Assembly	037276-4-1	5-10
	Rear Panel Assembly	037248-4-1	5-11
	Left Hand Side Assembly	037261-4-1	5-12
	Center Support Assembly	037257-4-1	5-13
	Front Guard Assembly	037270-4-1	5-14
	Rear Guard Assembly	037267-4-1	5-15
	Left Hand Annunciator Assembly	037283-4-1	5-16
	Right Hand Annunciator Assembly	037280-4-1	5-17
J201	Line Filter Assembly	031331-4-1	5-18
T201	Power Transformer (Sheet 1 of 2)	037254-6-1	5-19
T201	Power Transformer (Sheet 2 of 2)	037254-6-1	5-20
	Shipping Assembly Parts List	037630-8-1	5-21
	Test Assembly Parts List	037637	5-22
	Chassis Assembly Parts List	037638	5-24
	Front Panel Assembly Parts List	037239-4-1	5-26
	Input Guard Assembly Parts List	037276-4-1	5-28
	Rear Panel Assembly Parts List	037248-4-1	5-29
	Left Hand Side Assembly Parts List	037261-4-1	5-32
	Center Support Assembly Parts List	037257-4-1	5-34
	Gated Pulse Transformer Parts List	037262-4-1	5-36
	Pulse Transformer Assembly Parts List	037167-4-1	5-37
	Front Guard Assembly Parts List	037270-4-1	5-38
	Rear Guard Assembly Parts List	037267-4-1	5-39
	Left Hand Annunciator Assembly Parts List	037283-4-1	5-40
	Right Hand Annunciator Assembly Parts List	037280-4-1	5-41
	Filter Line Assembly Parts List	031331-4-1	5-42
A1	Guarded Control Assembly	037168-4-1	A1-3
	Schematic	037168-7-1	A1-4
	Parts List	037168-4-1	A1-5
A2	DC Attenuator Filter Assembly	037279-4-1	A2-2
	Schematic	037279-7-1	A2-3
	Parts List	037279-4-1	A2-4
	Reed Switch Assembly (High Voltage) Parts List	037461-4-1	A2-8
A3	Input Amplifier Schematic	037176-7-1	A3-3
	Assembly	037176-4-1	A3-4
	Parts List	037176-4-1	A3-5
	Reed Switch Assembly (Low Voltage) Parts List	037462-4-1	A3-11
	Resistor Network Assembly	037182-4-1	A3-12
	Parts List	037182-4-1	A3-13

TABLE 5.1 DRAWING INDEX (Cont'd)

Ref	Description	Dwg #	Page #
A4	Integrator & Zero Detector Assembly	03762901	A4-2
	Schematic	7-03762901	A4-3
	Parts List	03762901	A4-4
A5	A-D Control Logic Schematic	7-03762301	A5-3
	Assembly	03762301	A5-4
	Parts List	03762301	A5-5
A6	Reference and Power Supply Schematic	7-0375501	A6-3
	Assembly	03755101	A6-4
	Parts List	03755101	A6-5
A10	Analog Mother Assembly	037204-4-1	A10-3
	Schematic	037204-7-1	A10-4
	Parts List	037204-4-1	A10-5
A101	Shielded Power Supply Assembly	037258-4-1	A101-1
	Parts List	037258-4-1	A101-2
A11	Digital Count and Control Assembly	037208-4-1	A11-5
	Schematic	037208-7-1	A11-6
	Parts List	037208-4-1	A11-8
A12	Switch Assembly	037212-4-1	A12-2
	Schematic	037212-7-1	A12-3
	Parts List	037212-4-1	A12-4

Each column in the parts list provides specific information relating to the listed parts as follows:

1) REFERENCE DESIGNATION: P.C. assemblies are listed in numerical order. Reference numbers applicable to these assemblies are listed in alpha-numeric order.

2) NAME OF COMPONENT AND DESCRIPTION: Component names and specifications are provided in these columns and include: value, tolerance, wattage rating, working voltage, construction, etc.

3) MANUFACTURER'S CODE: H4-2 Federal Supply Code numbers are listed to identify component manufacturers. A Manufacturer's Index is provided in Chapter 7, Appendix A, for cross-reference.

4) MANUFACTURER'S PART NUMBER: True manufacturer part numbers are listed in this column.

5) NUMBER OF TIMES USED: This quantity, appearing after an item entry, indicates the number of times the component is used in that assembly.

6) S-D STOCK NUMBER: The Systron-Donner stock number is listed in this column.

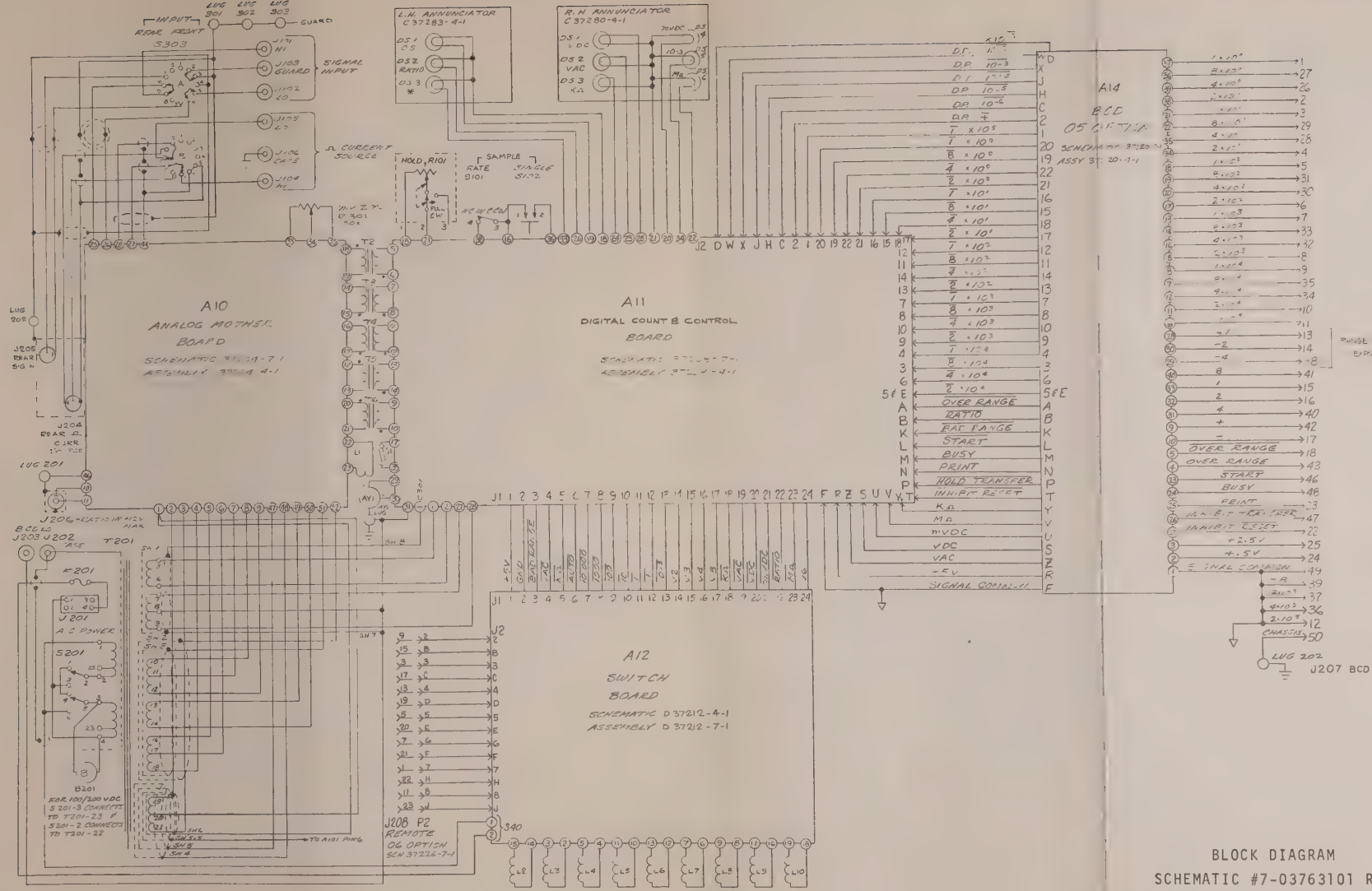

BLOCK DIAGRAM
SCHEMATIC #7-03763101 REV A

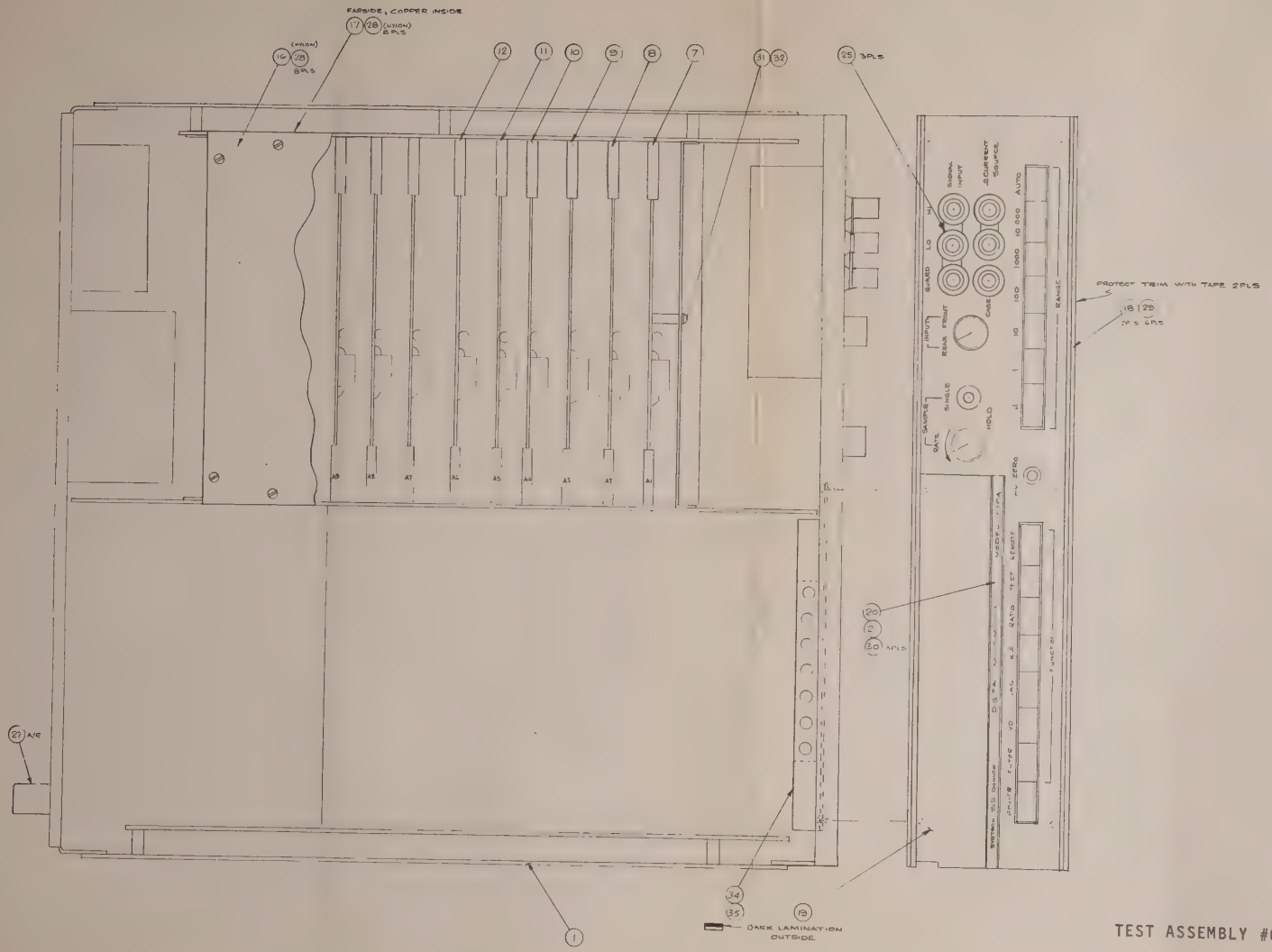

TEST ASSEMBLY #037637 REV C

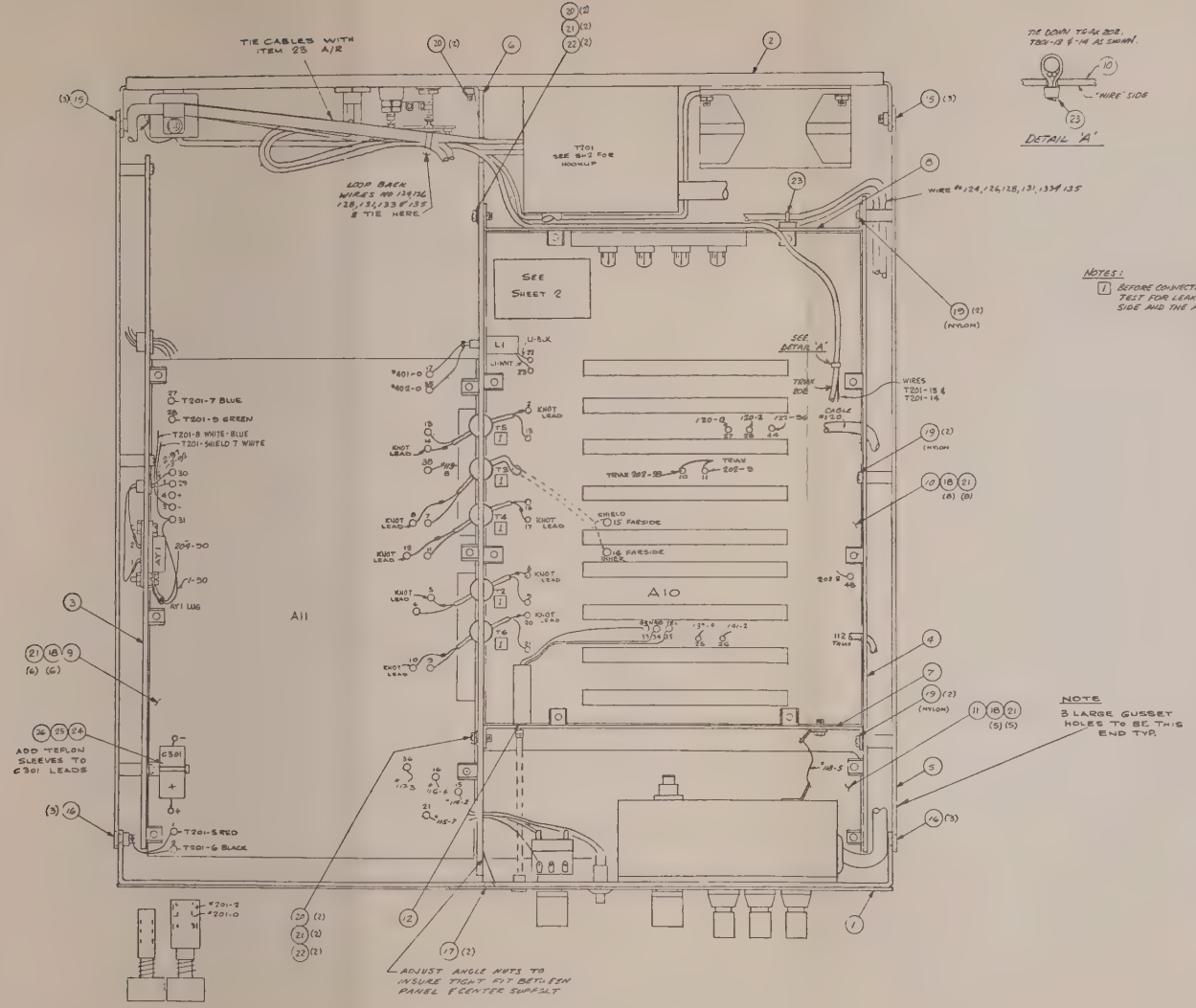

NOTES:

1. BEFORE CONNECTION OF PULSE TRANSFORMERS T2 - T6 TO ANY TERMINALS ON A11 & A10, TEST FOR LEAKAGE OR BREAKDOWN AT 2500VAC BETWEEN WINDING ON DIGITAL (A11) SIDE AND THE ANALOG GUARD.

CHASSIS ASSEMBLY #037638 REV D
(SHEET 1 OF 2)

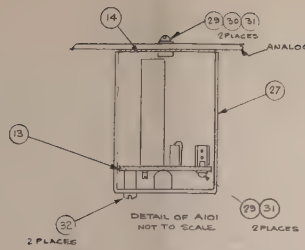

A101 HOOKUP

A101 PIN	WIRE# COLOR
1	T201-21 WHT/BRN
2	T201-19 RED/BRN
3	T20 - 20 RED/BLK
8	A10-5 8 FROM TERM 40
5	T201-SH6 GRN
6	T20 - SH5 5 WHT A10-5 - FROM TERM 39
7	A10 - 2-0 FROM TERM 31
9	A10 - SH7 B FROM TERM 50
10	A10 - 2-2 FROM TERM 32

T201 CABLE A' HOOKUP

A10 PAD	WIRE# COLOR
46	T201-SH4 ORANGE
47	T201-SH5 YELLOW

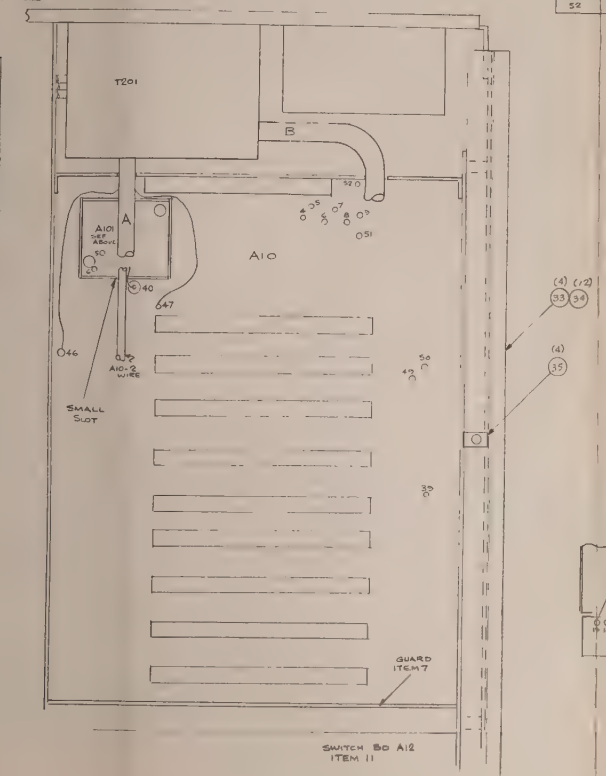

T201 CABLE B' HOOKUP

A10 PAD#	WIRE# COLOR
4	T201-18 WHT.
5	T201-16 WHT/BLU
6	T201-17 WHT/VIO
7	T201-11 WHT/BRN
8	T201-10 BLACK
9	T201-12 WHT/RED
49	T201-13 WHT/ORN
50	T201-14 WHT/YEL.
51	T201-SH3 RED
52	T201-SH2 BROWN

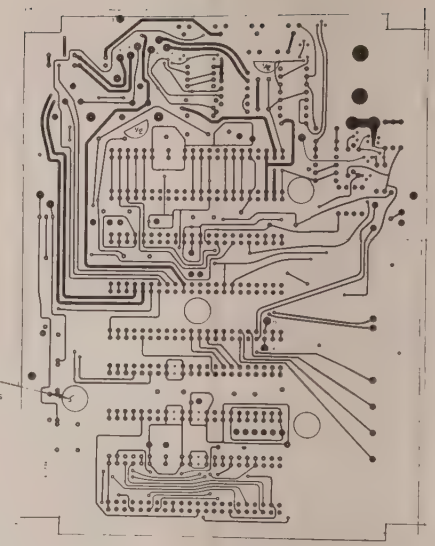

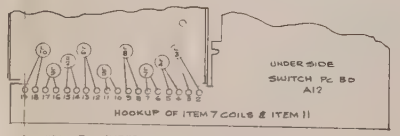

HOOKUP NUMBERED COIL WIRE TO CORRESPONDING TERMINAL

CHASSIS ASSEMBLY #037638 REV D
(SHEET 2 OF 2)

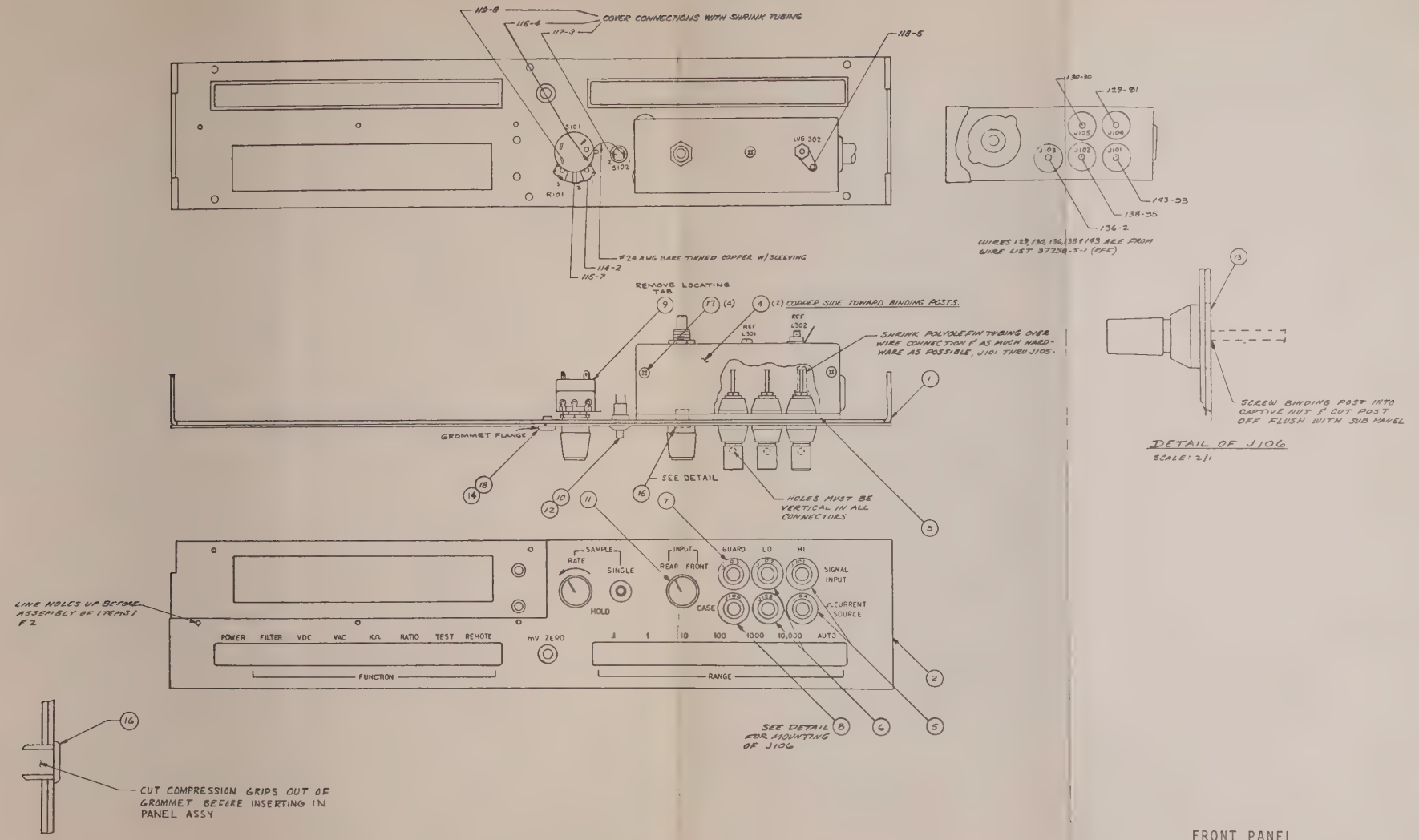

FRONT PANEL
ASSEMBLY #037239-4-1 REV D

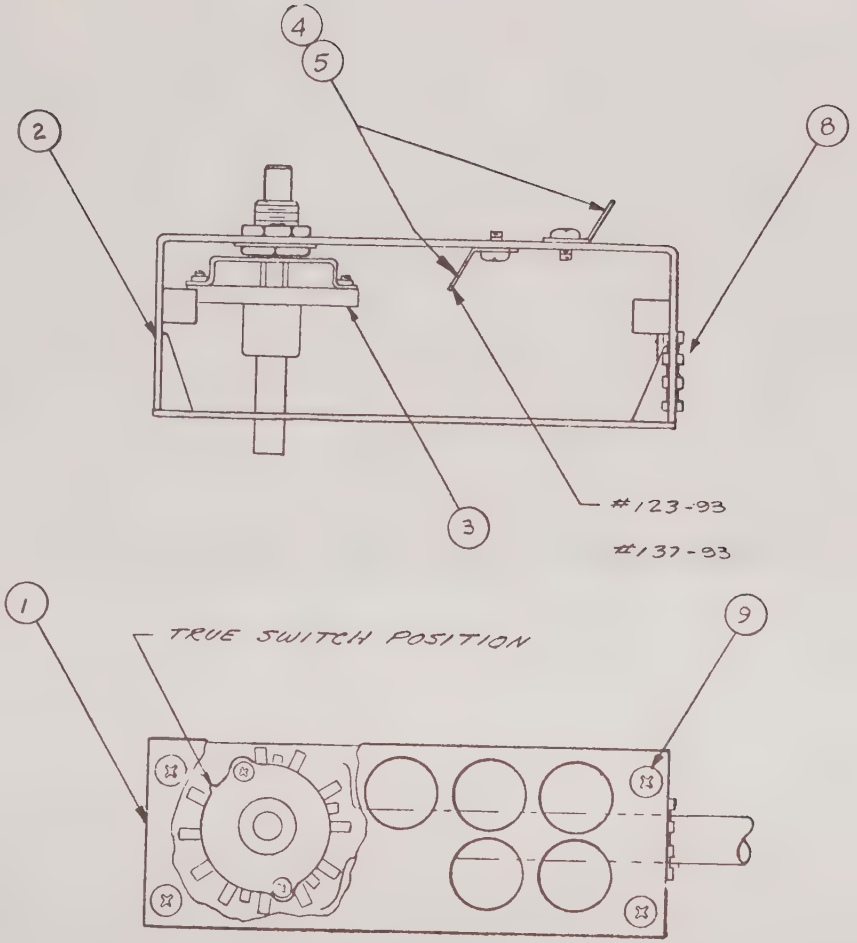

INPUT GUARD ASSEMBLY #037276-4-1 REV E

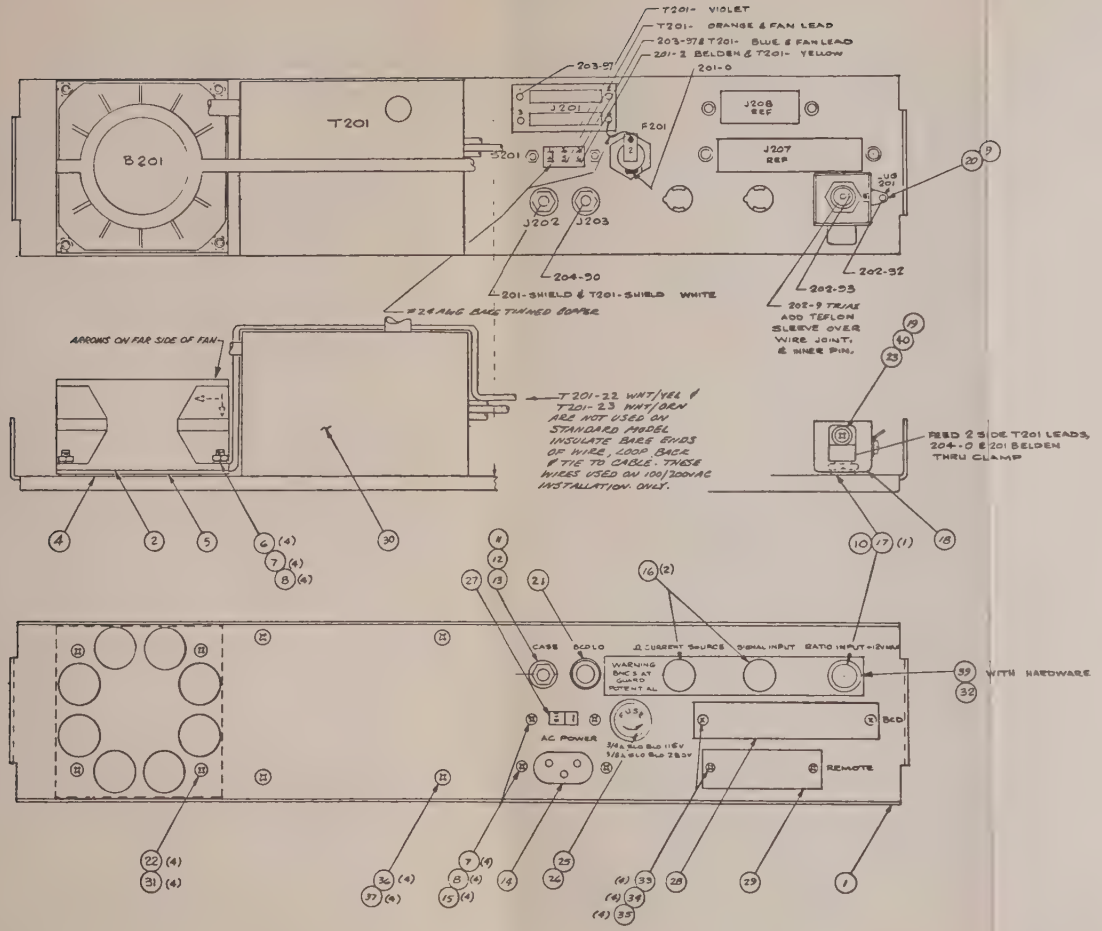

REAR PANEL
ASSEMBLY #037248-4-1 REV F

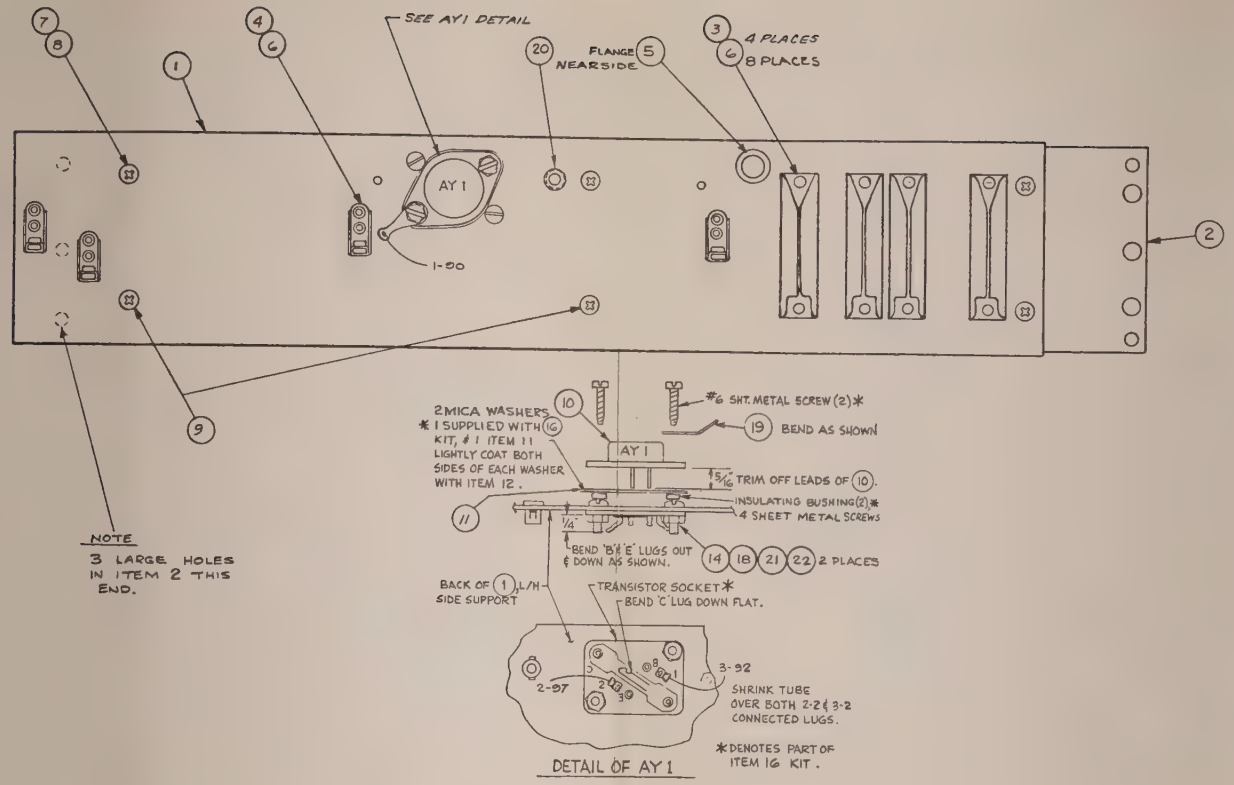

LEFT HAND SIDE
ASSEMBLY #037261-4-1 REV D

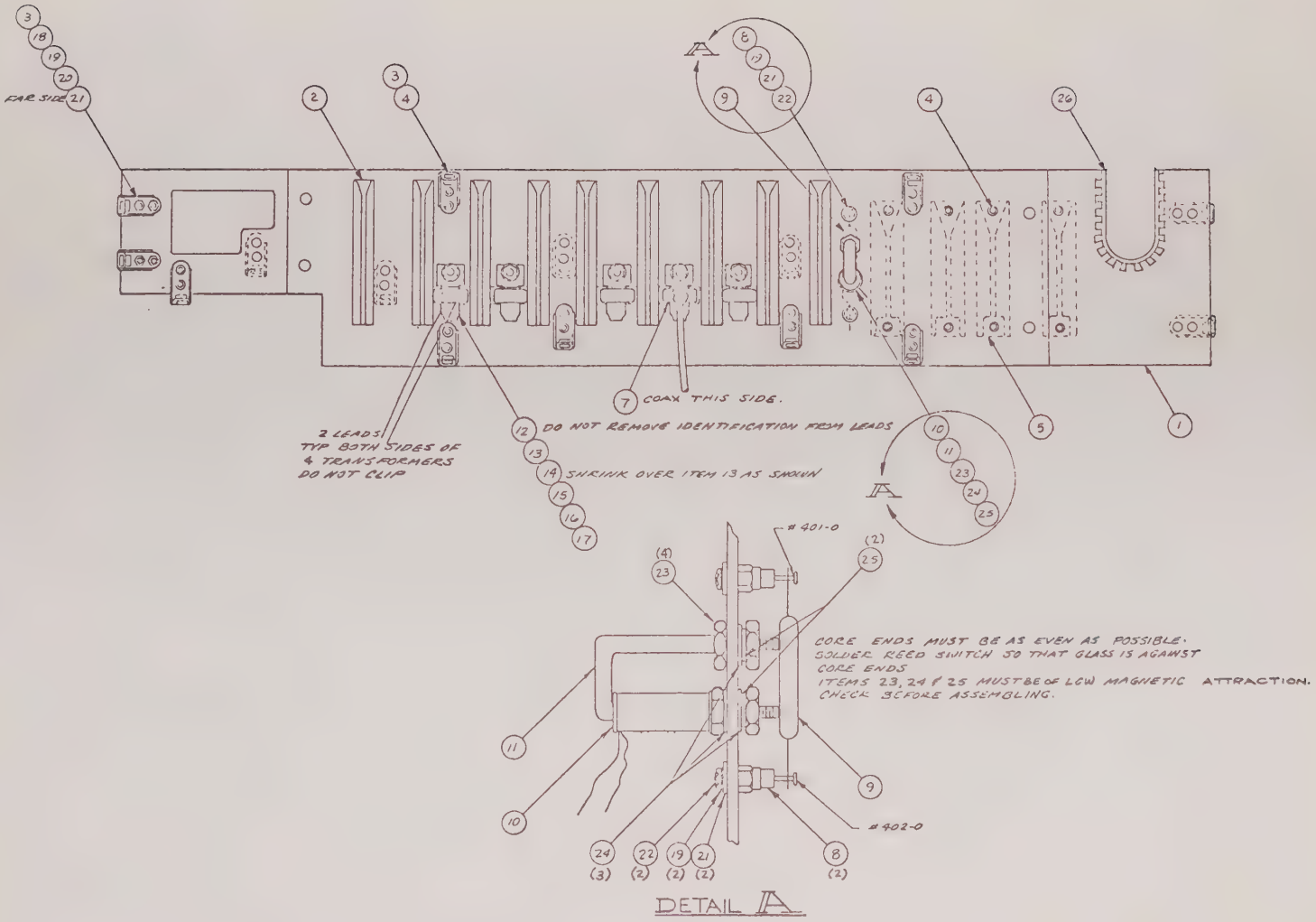

CENTER SUPPORT ASSEMBLY #037257-4-1 REV D

COIL LEAD NUMBERING CHART		
COIL	WHITE	BLACK
L2	14	15
L3	2	3
L4	4	5
L5	10	11
L6	12	13
L7	6	7
L8	8	9
L9	16	17
L10	19	18

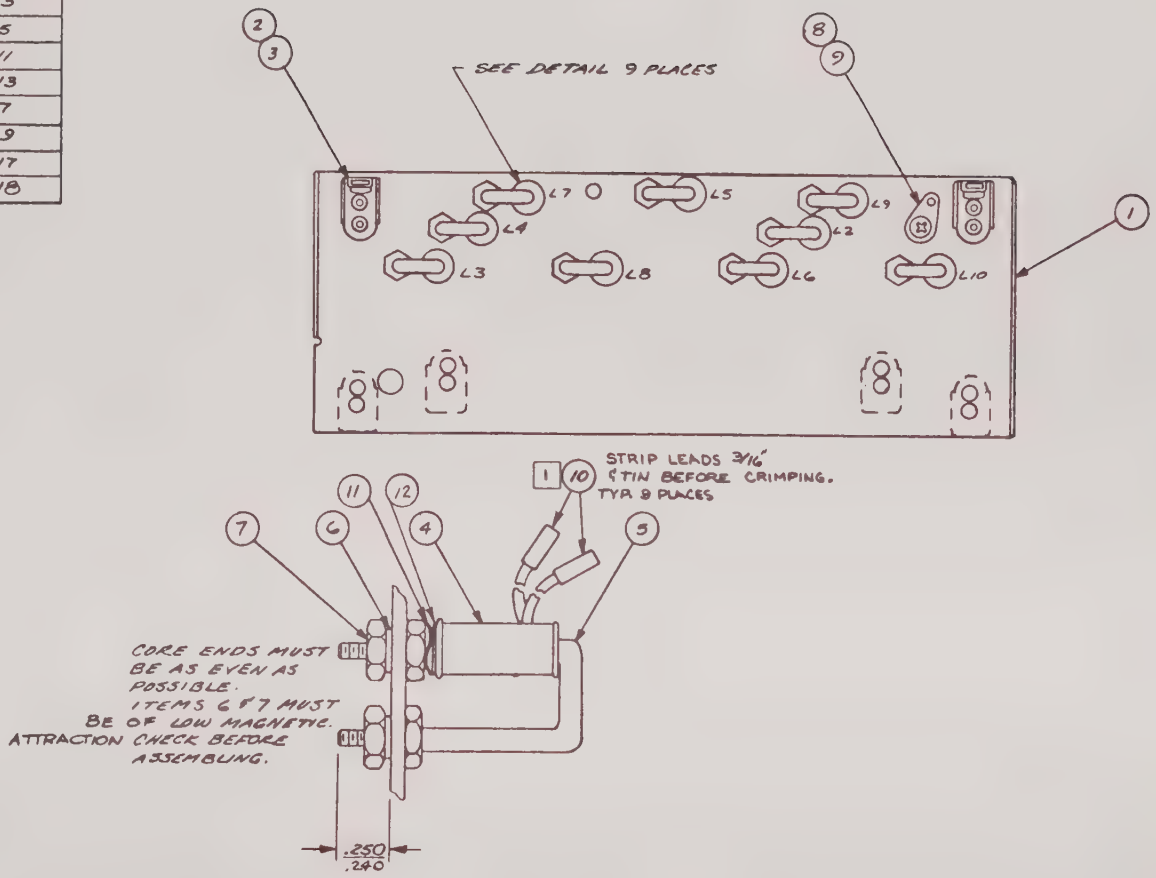

NOTE:

1. AFTER MOUNTING COILS ON GUARD, NUMBER THE BLACK & WHITE WIRES PER CHART ABOVE.

FRONT GUARD ASSEMBLY #037270-4-1 REV A

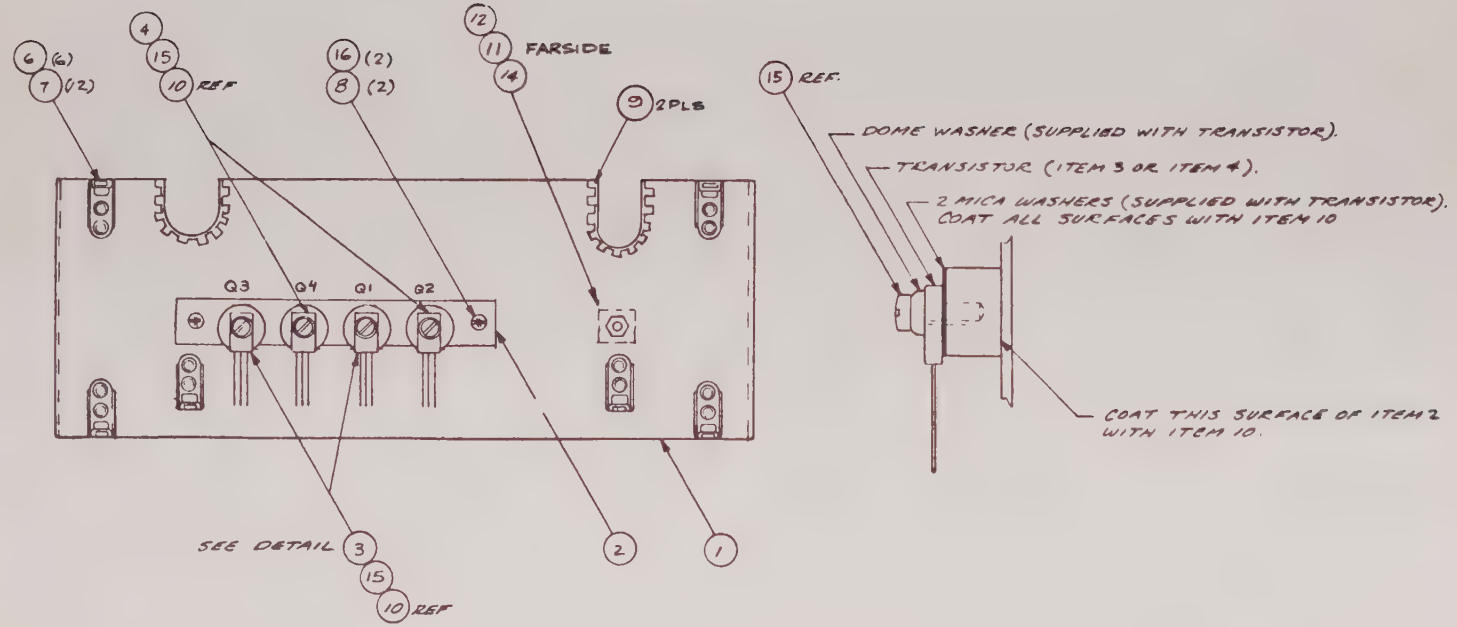

REAR GUARD ASSEMBLY #037267-4-1 REV A

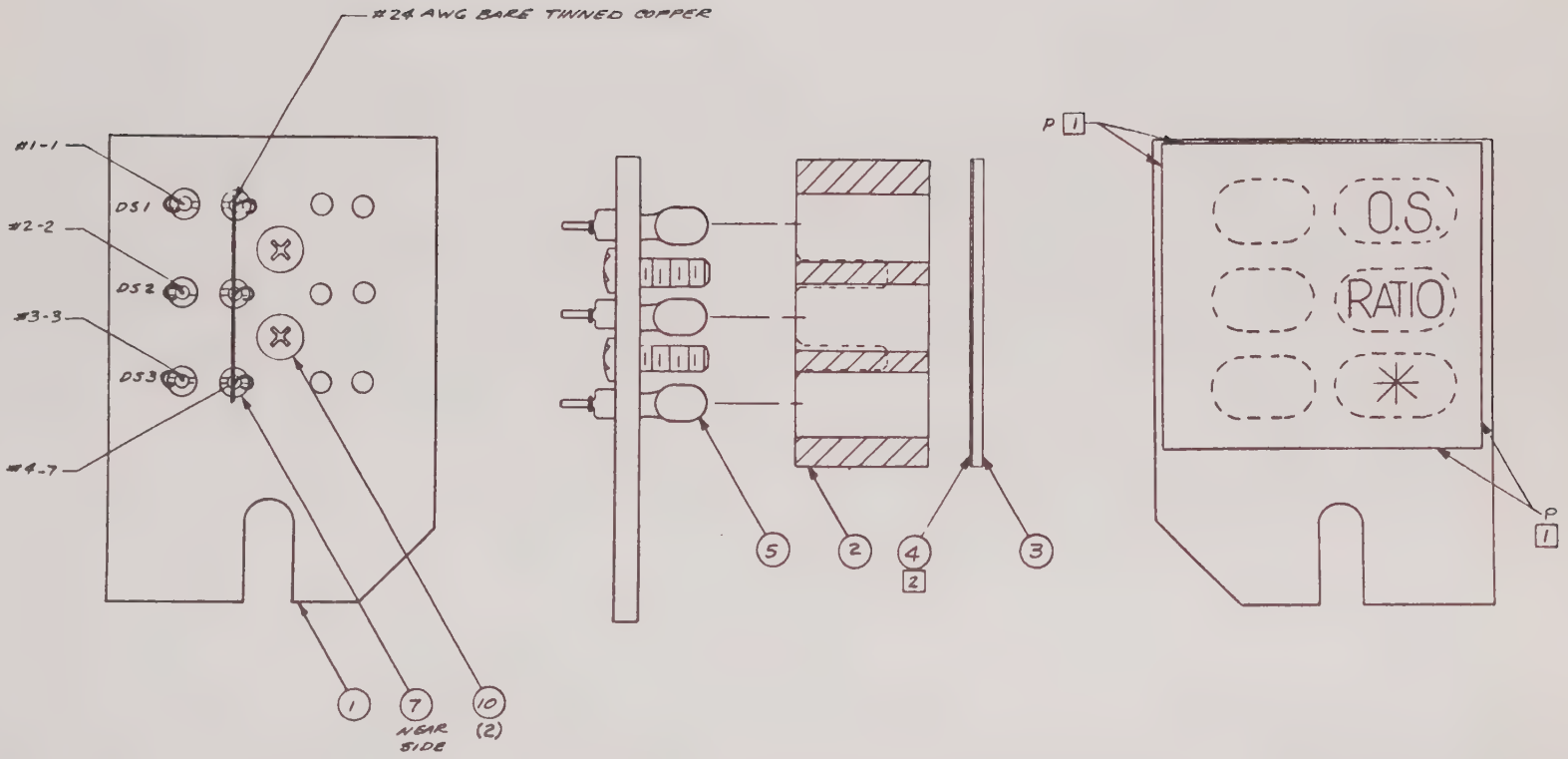

LEFT HAND ANNUNCIATOR #037283-4-1 REV D

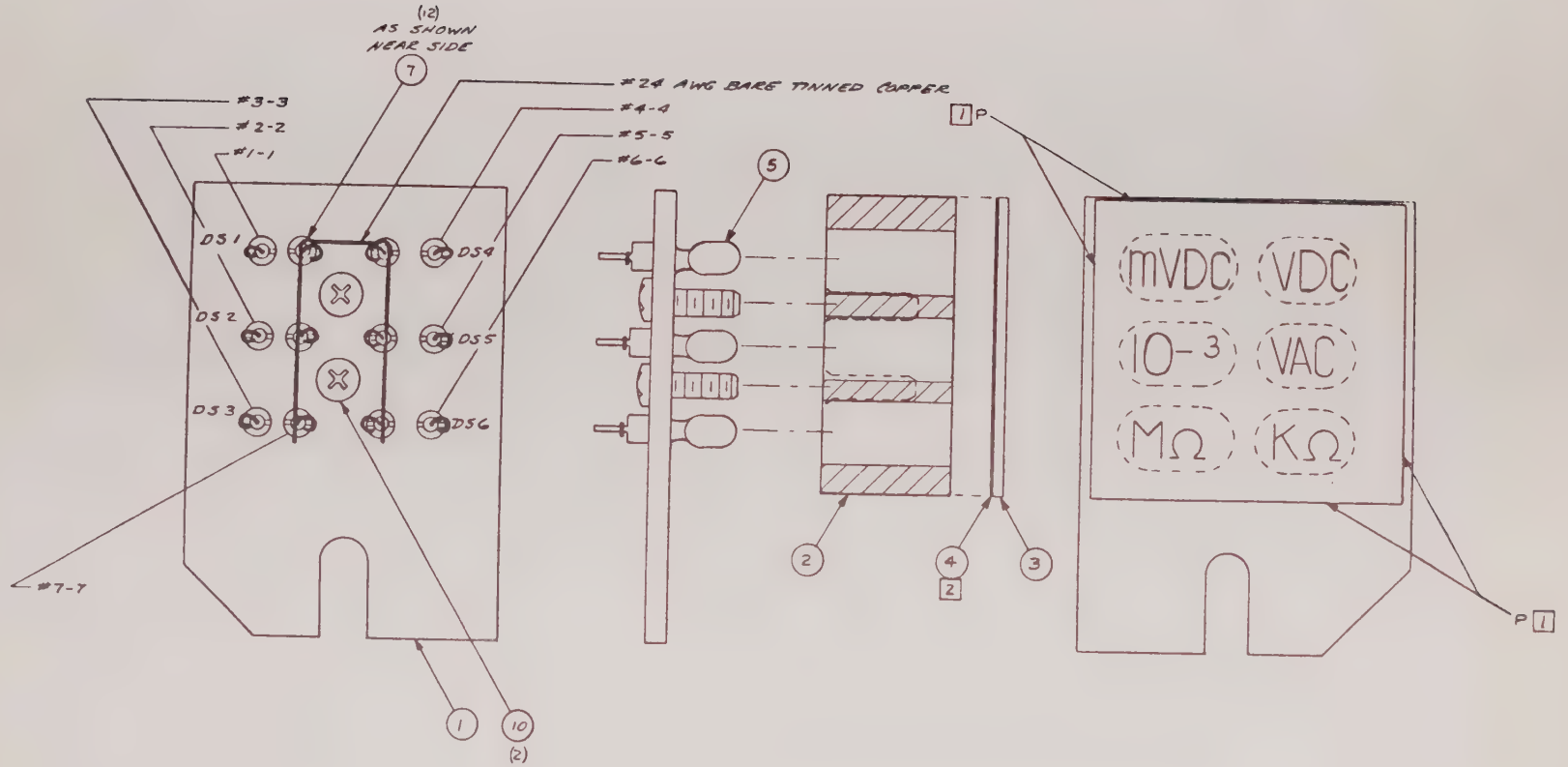

RIGHT HAND ANNUNCIATOR #037280-4-1 REV D

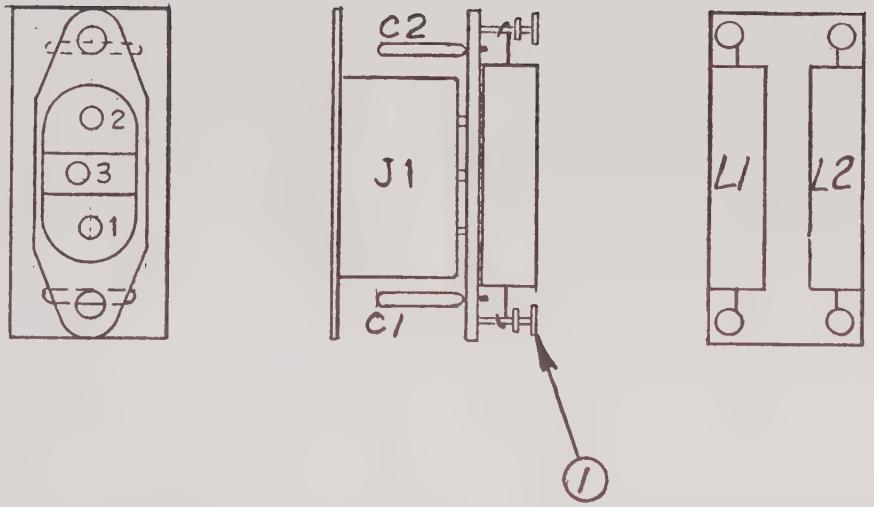

LINE FILTER ASSEMBLY #031331-4-1 REV A

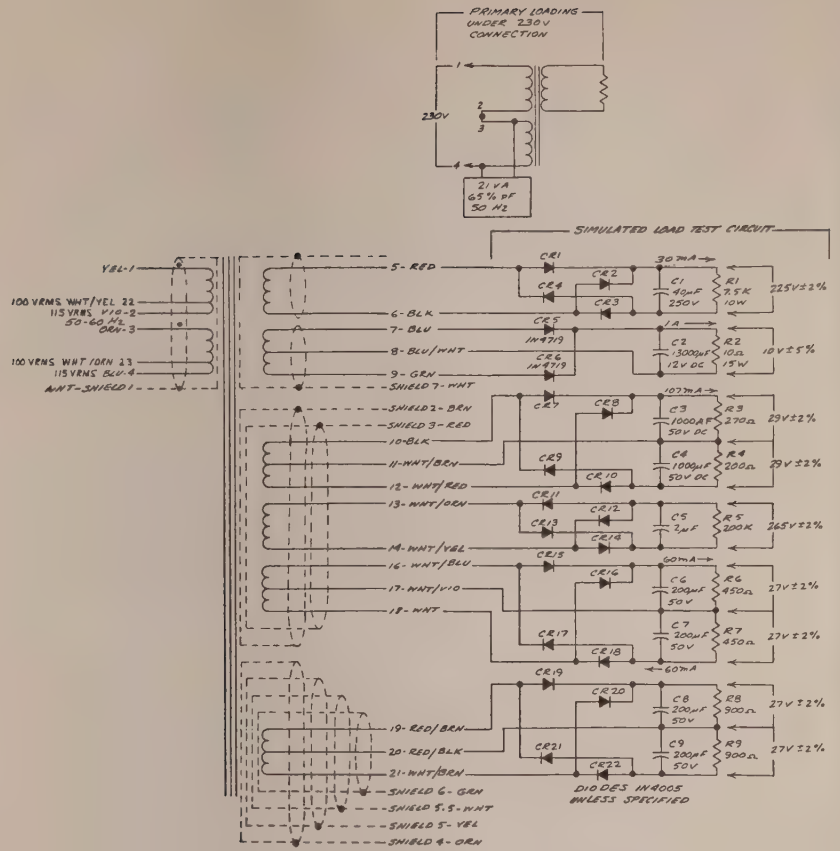

NOTE: (SEE SHEET 2 ALSO)

1. ABOUT 5 CFM OF AIR AT AMBIENT TEMP (50 C MAX) AVAILABLE FOR COOLING.
2. RATED FOR CONTINUOUS OPERATION AT 240V, 50 H_2
3. SECONDARY VOLTAGES SHOULD BE DESIGNED FOR THE INDICATED LOAD VOLTS.
4. a. SHIELDING SUFFICIENT TO REDUCE CAPACITANCE FROM PRIMARIES, SECONDARIES (5, 6), (7, 8, 9), SHIELD 1 & CORE TO SECONDARIES 10 THRU 18 & SHIELD 3 WITH SHIELD 2 AT LOW SIDE OF DRIVE TO LESS THAN 1 pF.
   b. SHIELDING SUFFICIENT TO REDUCE CAPACITANCE FROM WINDINGS 10 THRU 18 TO SHIELD 6, WINDING (19, 20, 21) WITH SHIELD 3, SHIELD 5 & SHIELD 5.5 AT LOW SIDE OF DRIVE & SHIELD 2 TIED TO SHIELD 4 & FLOATING, TO LESS THAN 0.01 pF.
   c. CAPACITANCE FROM PRIMARIES TO WINDING (5, 6) & (7, 8, 9) WITH SHIELD 1, & CORE AT LOW SIDE OF DRIVE LESS THAN 1 pF.
5. WORKING VOLTAGES:
   5 ⟷ 9 TO SHIELD 1 — 1 KV PK
   10 ⟷ 21 & SHIELD 3 TO SHIELD 2 — 1 KV PK.
   SHIELD 2 & SHIELD 4 TO SHIELD 1 & CORE — 1 KV PK.
6. PART NUMBER & LATEST ISSUE TO BE MARKED ON TRANSFORMER CASE.

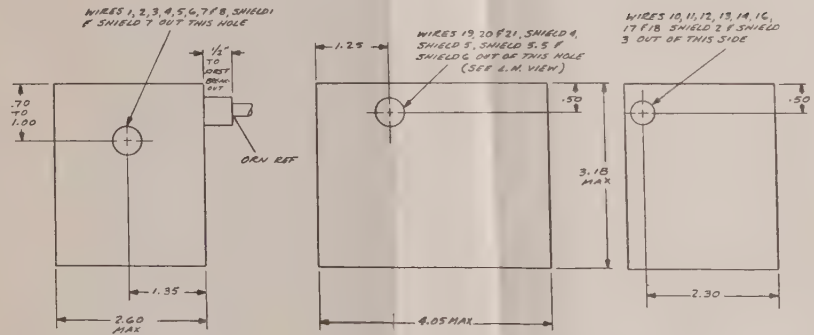

T201, POWER TRANSFORMER
#037254-6-1 REV C
(SHEET 1 OF 2)

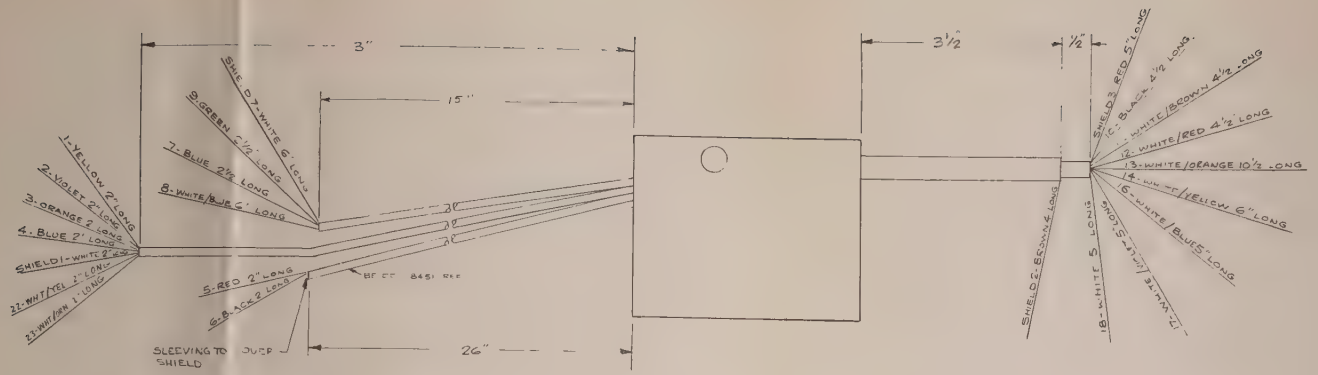

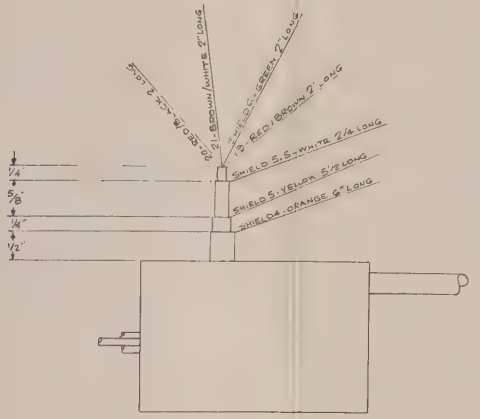

NOTE:-
1. ALL LEADS & INSULATION TO BE TEFLON COLOR CODED AS SHOWN
2. WIRE LENGTHS INCLUDE ¼" TINNED & STRIPPED END
3. ALL LENGTHS ± ⅛"
4. WIRE TRIPLES (10,11, 12) (16,17,18) (19 20,21) TO BE TWISTED TRIPLES.

T201, POWER TRANSFORMER
#037254-6-1 REV C
(SHEET 2 OF 2)

REPLACEABLE PARTS LIST

Equipment/Assembly Designation: Shipping Assembly #037630-8-1

(1) Reference Designation		(2) Name of Component and Description	(3) Mfr's Code	(4) Manufacturer's Part Number	(5) No. Times Used	(6) Remarks/ SD Stock No.
ITEM	REF					
5	-B-	ASSEMBLY, TEST	06811	037637	1	037637
7		TRIM, END	06811	033693	4	033693
9		COVER, SIDE	06811	033764-5-1	2	033764-5-1
11		COVER, TOP	06811	033760-5-1	1	033760-5-1
13		COVER, BOTTOM	06811	037185-1-1	1	037185-1-1
15		HANDLE	06811	033570-5-1	2	033570-5-1
17		PLATE, IDENTIFICATION	06811	023456	1	023456
30		FEET, SET	21604	PP40012&40013	1	H2037
32		BAIL, LONG	15933	32000-059	1	H2036
34		CONNECTOR: Mating, Ratio	91836	KC59-187	1	09066990
36		CORD, LINE	70903	17258	1	W0076

REPLACEABLE PARTS LIST

Equipment/Assembly Designation TEST ASSEMBLY #037637

(1) Reference Designation		(2) Name of Component and Description	(3) Mfr's Code	(4) Manufacturer's Part Number	(5) No. Times Used	(6) Remarks/ SD Stock No.
ITEM	REF					
1		ASSEMBLY, CHASSIS	06811	037638	1	037638
7	A1	ASSEMBLY, GUARDED CONTROL	06811	037168-4-1	1	037168-4-1
8	A2	ASSEMBLY, DC ATTENUATOR	06811	037279-4-1	1	037279-4-1
9	A3	ASSEMBLY, INPUT AMPLIFIER	06811	037176-4-1	1	037176-4-1
10	A4	ASSEMBLY, INTEGRATOR ZERO P.C.	06811	03762901	1	03762901
11	A5	BOARD, P.C.: A-D CONTROL LOGIC	06811	03762301	1	03762301
12	A6	ASSEMBLY, REFERENCE AND POWER SUPPLY	06811	03755101	1	03755101
16		GUARD, TOP	06811	037639	1	037639
17		COVER, BOTTOM GUARD	06811	037271-1-1	1	037271-1-1
18		TRIM, FRONT FULL RACK	06811	033762	2	033762
19		WINDOW, READOUT	06811	037243-1-1	1	037243-1-1
20		STRIP, TRIM	06811	037244-1-1	1	037244-1-1
21		STRIP, FOIL CAL TRIM	06811	037628	1	037628
25		STRAP, CAPTIVE SHORTING	24655	0938-9712	3	E0317
27		CONNECTOR, MATING	91836	KC59-187	1	09066990
28		SCREW, BINDER HEAD: 6-32 X 3/8	95987	N-632-3/8BH BLK	16	H1029
29		SCREW, PAN HEAD MACHINE: 4-40 X 1/4	MIL	MS51957-13	6	H0440
30		SCREW, FLAT HEAD MACHINE: 2-56 X 1/4	MIL	AN507-C256-R4	3	H1156

REPLACEABLE PARTS LIST

Equipment/Assembly Designation TEST ASSEMBLY #037637 (Cont'd)

(1) Reference Designation		(2) Name of Component and Description	(3) Mfr's Code	(4) Manufacturer's Part Number	(5) No. Times Used	(6) Remarks/ SD Stock No.
ITEM	REF					
31		SCREW, PAN HEAD MACHINE: 6-32 X 3/8	MIL	MS51957-28	1	H0989
32		WASHER: Split-lock #6	MIL	MS35338-136	1	H0783
34		TAPE, FOAM	76381	4308	A/R	H1998
35		TUBE, RETAINER	06811	037499-1-1	1	037499-1-1

REPLACEABLE PARTS LIST

Equipment/Assembly Designation CHASSIS ASSEMBLY #037638

(1) Reference Designation		(2) Name of Component and Description	(3) Mfr's Code	(4) Manufacturer's Part Number	(5) No. Times Used	(6) Remarks/ SD Stock No.
ITEM	REF					
1		ASSEMBLY, FRONT PANEL	06811	037239-4-1	1	037239-4-1
2		ASSEMBLY, REAR PANEL	06811	037248-4-1	1	037248-4-1
3		ASSEMBLY, LEFT HAND SIDE	06811	037261-4-1	1	037261-4-1
4		ASSEMBLY, RIGHT HAND SIDE	06811	037265-4-1	1	037265-4-1
5		GUSSET, RIGHT HAND	06811	037264-1-1	1	037264-1-1
6		ASSEMBLY, CENTER SUPPORT	06811	037257-4-1	1	037257-4-1
7		ASSEMBLY, FRONT GUARD	06811	037270-4-1	1	037270-4-1
8		ASSEMBLY, REAR GUARD	06811	037267-4-1	1	037267-4-1
9	A11	ASSEMBLY, DIGITAL COUNT AND CONTROL	06811	037208-4-1	1	037208-4-1
10	A10	ASSEMBLY, ANALOG MOTHER P.C.	06811	037204-4-1	1	037204-4-1
11	A12	ASSEMBLY, P.C. SWITCH	06811	037212-4-1	1	037212-4-1
12	R301	RESISTOR, POTENTIOMETER, CERAMIC: 50 kΩ ±10%, 1 W, 22-turn	06811	R2726	1	R2726
13	A101	POWER SUPPLY, SHIELDED, P.C.	06811	037258-4-1	1	037258-4-1
14		CASE, SHIELD	06811	037249-1-1	1	037249-1-1
15		SCREW, FLAT HEAD MACHINE: 8-32 X 3/8, 100°	MIL	MS24693-C43	6	H1634
16		SCREW, FLAT HEAD MACHINE: 8-32 X 1/4, 100°	MIL	MS24693-C46	6	H1756
17		SCREW, FLAT HEAD MACHINE: 6-32 X 3/8, 82°, black oxide			2	60112650

REPLACEABLE PARTS LIST

Equipment/Assembly Designation CHASSIS ASSEMBLY #037638 (Cont'd)

(1) Reference Designation		(2) Name of Component and Description	(3) Mfr's Code	(4) Manufacturer's Part Number	(5) No. Times Used	(6) Remarks/ SD Stock No.
ITEM	REF					
18		SCREW, PAN HEAD MACHINE: 6-32 X 3/8	MIL	MS51957-28	19	H0989
19		SCREW, BINDER HEAD: 6-32 X 3/8, nylon	95987	N-632-3/8BH BLK	6	H1029
20		SCREW, PAN HEAD MACHINE: 6-32 X 5/16	MIL	MS51957-27	6	H1281
21		WASHER: Flat #6	MIL	MS15795-805	23	H0759
22		WASHER: Split-lock #6	MIL	MS35338-136	4	H0783
23		CABLE, TIE: Nylon	06383	SSTIM	A/R	H1104
24	C301	CAPACITOR, ELECTROLYTIC: 30 µF +100-10%, 250 Vdcw	90201	TC57	1	C1252
25		TIE, ANCHOR	06383	TIMS6	1	37021790
26		TIE, CABLE	06811	37021730	1	37021730
27		COVER, SHIELD	06811	037233-1-1	1	037233-1-1
28		FOOT, RUBBER	76381	5112	5	H1831
29		SCREW, PAN HEAD MACHINE: 4-40 X 5/16	MIL	MS51957-14	4	H1273
30		WASHER: Split-lock #4	MIL	MS35338-135	2	H0782
31		WASHER: Flat #4	MIL	MS15795-803	4	H0758
32		SCREW, BINDER HEAD:	95987	N-632-3/8BH BLK	2	H1029
33		EXTRUSION, SIDE	06811	033564-5	4	033564-5
34		SCREW, PAN HEAD MACHINE: 6-32 X 1/4	MIL	MS51957-26	12	H0986
35		NUT, KEP: 4-40	78189	511-041800-00	4	H1872

REPLACEABLE PARTS LIST

Equipment/Assembly Designation: FRONT PANEL ASSEMBLY #037239-4-1

(1) Reference Designation		(2) Name of Component and Description	(3) Mfr's Code	(4) Manufacturer's Part Number	(5) No. Times Used	(6) Remarks/ SD Stock No.
ITEM	REF					
1		PANEL, SUB FRONT	06811	037242-1-1	1	037242-1-1
2		PANEL, FRONT DECORATIVE	06811	037241-6-1	1	037241-6-1
3		ASSEMBLY, INPUT GUARD	06811	037276-4-1	1	037276-4-1
4		COVER, GUARD BOX	06811	037277-1-1	2	037277-1-1
5	J101	BINDING POST: Red top and insulator, copper	24655	938KR	2	E0327
5	J104	BINDING POST: Red top and	24655	938KR	2	E0327
6	J102	BINDING POST: Black top and insulator, copper	24655	938HB	2	E0328
6	J105	BINDING POST: Black top and insulator, copper	24655	938HB	2	E0328
7	J103	BINDING POST: Grey top and insulator	24655	938WG	1	E0326
8	J106	BINDING POST: Metal top, gray insulator	24655	938-S	1	E0329
9	S101	RESISTOR, POTENTIOMETER/SWITCH CERAMIC: 1.2 MΩ w/SPDT, CW	06811	R2785	1	R2785
9	R101	RESISTOR, POTENTIOMETER/SWITCH CERAMIC: 1.2 MΩ w/SPDT, CW	06811	R2785	1	R2785
10	S102	SWITCH, PUSHBUTTON, SINGLE: Red, 1/4" bushing	81073	30-1	1	S0160
11		KNOB: No skirt, 1/4" shaft	86797	RB-67-1-DC-M-L	2	H1937
12		NUT, DRESS: 1/4-32	81073	30C1023	1	H1837
13		DISC, GROUND	06811	037171-1-1	1	037171-1-1

REPLACEABLE PARTS LIST

Equipment/Assembly Designation FRONT PANEL ASSEMBLY #037239-4-1 (Cont'd)

(1) Reference Designation		(2) Name of Component and Description	(3) Mfr's Code	(4) Manufacturer's Part Number	(5) No. Times Used	(6) Remarks/ SD Stock No.
ITEM	REF					
14		BUSHING: Shoulder #6	23050	By description	1	H0941
15		WIRE LIST	06811	037239-5-1	1	037239-5-1
16		GROMMET, 3/8 diameter	28520	SB-375-4	1	H1244
17		SCREW, FLAT HEAD MACHINE: 6-32 X 3/8, nylon, 82°	95987	N-632-3/8FLHDNA	4	H2047
18		GROMMET, 1/4 diameter	28520	SB-250-2	1	H0883

REPLACEABLE PARTS LIST

Equipment/Assembly Designation: INPUT GUARD ASSEMBLY #037276-4-1

(1) Reference Designation		(2) Name of Component and Description	(3) Mfr's Code	(4) Manufacturer's Part Number	(5) No. Times Used	(6) Remarks/ SD Stock No.
ITEM	REF					
1		GUARD, INPUT	06811	037246-1-1	1	037246-1-1
2		BOX, GUARD FRONT	06811	037247-1-1	1	037247-1-1
3		ASSEMBLY, INPUT SWITCH	06811	037298-4-1	1	037298-4-1
4	301	LUG, SOLDER #6	83330	1413-6	2	E0111
4	302	LUG, SOLDER #6	83330	1413-6	2	E0111
5		SCREW, PAN HEAD MACHINE: 6-32 X 3/16	MIL	MS51957-25	2	H0436
5		SCREW, PAN HEAD MACHINE: 6-32 X 3/16	MIL	MS51957-25	2	H0436
8		GROMMET, CATERPILLAR	03296	G51H-B	A/R	H1829
9		SCREW, FLAT HEAD MACHINE: 6-32 X 5/16, 100°	MIL	MS24693-C25	4	H0287
9		SCREW, FLAT HEAD MACHINE: 6-32 X 5/16, 100°	MIL	MS24693-C25	4	H0287
9		SCREW, FLAT HEAD MACHINE: 6-32 X 5/16, 100°	MIL	MS24693-C25	4	H0287
9		SCREW, FLAT HEAD MACHINE: 6-32 X 5/16, 100°	MIL	MS24693-C25	4	H0287

REPLACEABLE PARTS LIST

Equipment/Assembly Designation: REAR PANEL ASSEMBLY #037248-4-1

(1) Reference Designation		(2) Name of Component and Description	(3) Mfr's Code	(4) Manufacturer's Part Number	(5) No. Times Used	(6) Remarks/ SD Stock No.
ITEM	REF					
1		PANEL, REAR	06811	037248-1-1	1	037248-1-1
2	B201	FAN	23936	8500	1	H1786
3		Not used				
4		GUARD, FAN	06811	037466-1-1	1	037466-1-1
5		PLATE, MOUNTING FAN	06811	039614	1	039614
6		SCREW, FLAT HEAD MACHINE: 4-40 X 3/8, 100°	MIL	MS24693-C4	4	H0745
7		WASHER: Split-lock #4	MIL	MS35338-135	12	H0782
8		NUT: Hex 4-40		NAS671C4	12	H0249
9		SCREW, PAN HEAD MACHINE: 6-32 X 3/16	MIL	MS51957-25	1	H0436
10		WASHER: 3/8 nylon	83330	2679	2	H2034
11	J202	BINDING POST: Nut, nickel, Hex	58474	GP30NC	1	J0575
12		WASHER: 1/4	MIL	MS15795-808	1	H0411
13		WASHER: Split-lock #10	MIL	MS35338-138	1	H0785
14	J201	ASSEMBLY, FILTER LINE	06811	031331-4-1	1	031331-4-1
15		SCREW, PAN HEAD MACHINE: 4-40 X 1/4	MIL	MS51957-13	4	H0440
16		BUTTON, PLASTIC HOLE	02768	207-290502-00	3	H1894
17		WASHER: Insulating	07047	10221N	1	H1574
18		BOX, REAR GUARD	06811	037252-1-1	1	037252-1-1
19		CLAMP, CABLE	95987	3/8-4NA	1	H0791

REPLACEABLE PARTS LIST

Equipment/Assembly Designation: REAR PANEL ASSEMBLY #037248-4-1 (Cont'd)

(1) Reference Designation		(2) Name of Component and Description	(3) Mfr's Code	(4) Manufacturer's Part Number	(5) No. Times Used	(6) Remarks/ SD Stock No.
ITEM	REF					
20	LUG 201	LUG: Solder #6	73734	1955	1	E0118
21	J203	BINDING POST: Black fluted, gold/brass	58474	DF31BC	1	E0220
22		SCREW, PAN HEAD MACHINE: 6-32 X 3/8	MIL	MS51957-28	4	H0989
23		WASHER: Flat #6	MIL	MS15795-805	1	H0759
24		WIRE LIST	06811	037248-5-1	1	037248-5-1
25		POST, FUSE: 3 AG	75915	342004	1	X0034
26	F201	FUSE: 3/4 Amp, Slow Blow, 250 Vdcw	75915	323.750	1	F0070
27	S201	SWITCH, SLIDE: DPDT, 1.125 mounting	82389	46206LFR	1	S0384
28		PLATE, COVER	06811	031394-1-1	1	031394-1-1
29		PLATE, COVER: 24 pin connector	06811	031418-1-1	1	031418-1-1
30	T201	TRANSFER: Specification per drawing 37254	06811	037254-6-1	1	037254-6-1
31		WASHER: Split-lock #6	MIL	MS35338-136	4	H0783
32		COVER, CONNECTOR: BNC, plastic	97945	1704-9	1	09063020
33		WASHER: Split-lock #6	MIL	MS35337-77	4	H0481
34		SCREW, PAN HEAD MACHINE: 2-56 X 5/16	MIL	MS51957-4	4	H1275
35		WASHER: Flat #2	MIL	MS15795-802	4	H0138
36		SCREW, PAN HEAD MACHINE: 8-32 X 5/16	MIL	MS51957-42	4	H1130

REPLACEABLE PARTS LIST

Equipment/Assembly Designation: REAR PANEL ASSEMBLY #037248-4-1 (Cont'd)

(1) Reference Designation		(2) Name of Component and Description	(3) Mfr's Code	(4) Manufacturer's Part Number	(5) No. Times Used	(6) Remarks/ SD Stock No.
ITEM	REF					
37		WASHER: Split-lock #8	MIL	MS35338-137	4	H0784
38		TIE, CABLE	06383	SSTIM	A/R	H1104
39	J206	RECEPTACLE, RF, BNC	91836	KC79-85	1	09066790
40		SCREW, PAN HEAD MACHINE: 6-32 X 5/16	MIL	MS51957-27	1	H1281

REPLACEABLE PARTS LIST

Equipment/Assembly Designation: LEFT HAND SIDE ASSEMBLY #037261-4-1

(1) Reference Designation		(2) Name of Component and Description	(3) Mfr's Code	(4) Manufacturer's Part Number	(5) No. Times Used	(6) Remarks/ SD Stock No.
ITEM	REF					
1		ASSEMBLY, SIDE SUPPORT	06811	037261-1-1	1	037261-1-1
2		GUSSET, LEFT HAND	06811	037260-1-1	1	037260-1-1
3		P.C. BOARD, RETAINER	74370	15B-4-3	4	H1826
4		NUT: Angle #6	22599	52LHA227-62	4	61039120
5		GROMMET: 7/16 diameter	28520	SB-437-5	1	H1552
6		RIVET: Semitubular	12014	By description	16	H1839
7		SCREW, PAN HEAD MACHINE: 6-32 X 5/16	MIL	MS51957-27	4	H1281
8		WASHER: Split-lock #6	MIL	MS35338-136	4	H0783
9		SCREW, FLAT HEAD MACHINE: 6-32 X 5/16	MIL	MS24693-C25	2	H0287
10	AY1	INTEGRATED CIRCUIT: Linear, 5 Vdcw regulator	27014	LM309K	1	025787
11		WASHER, MICA	08289	DM-103	1	E0295
12		THERMAL COMPOUND	05820	120-8	A/R	H1055
13		Not used				
14		SCREW, PAN HEAD MACHINE: 4-40 X 5/16	MIL	MS51957-14	2	H1273
15		WIRE LIST	06811	037261-5-1	1	037261-5-1
16		KIT, MOUNTING: for TO-3 transistor	04713	MK-15	1	H0664
17		Not used				
18		NUT: Hex 4-40	MIL	NAS671C4	2	H0249

REPLACEABLE PARTS LIST

Equipment/Assembly Designation: LEFT HAND SIDE ASSEMBLY #037261-4-1 (Cont'd)

(1) Reference Designation		(2) Name of Component and Description	(3) Mfr's Code	(4) Manufacturer's Part Number	(5) No. Times Used	(6) Remarks/ SD Stock No.
ITEM	REF					
19		LUG: Solder #6	83330	1413-6	1	E0111
20		GROMMET: 1/4 diameter	28520	SB-250-2	1	H0883
21		WASHER: Split-lock #4	MIL	MS35338-135	2	H0782
22		WASHER: Flat #4	MIL	MS15795-803	2	H0758

REPLACEABLE PARTS LIST

Equipment/Assembly Designation: CENTER SUPPORT ASSEMBLY #037257-4-1

(1) Reference Designation		(2) Name of Component and Description	(3) Mfr's Code	(4) Manufacturer's Part Number	(5) No. Times Used	(6) Remarks/ SD Stock No.
ITEM	REF					
1		ASSEMBLY, CENTER SUPPORT	06811	037257-1-1	1	037257-1-1
2		GUIDE, P.C.	06811	021340-1-1	9	021340-1-1
3		NUT, FLOATING: 6-32 locking, right angle	22599	52LHA227-62	2	61039120
4		RIVET: Semitubular	12014	By description	34	H1840
5		P.C. GUIDE	74370	15B-4-3	4	H1826
6		Not used				
7	T3	ASSEMBLY, GATED PULSE TRANSFORMER	06811	037262-4-1	1	037262-4-1
8		SCREW, TERMINAL: 2-56 high	88245	1481 B	2	E0190
9	S1	REED: .5 A 200 V	95348	MR-107 15-30AT	1	100005
10	L1	COIL, REED: 12 Vdcw	71707	U-12	1	L0177
11		CORE, RELAY	06811	55017071	1	55017071
12	T2	ASSEMBLY, PULSE TRANSFORMER	06811	037167-4-1	4	037167-4-1
12	T4	ASSEMBLY, PULSE TRANSFORMER	06811	037167-4-1	4	037167-4-1
12	T5	ASSEMBLY, PULSE TRANSFORMER	06811	037167-4-1	4	037167-4-1
12	T6	ASSEMBLY, PULSE TRANSFORMER	06811	037167-4-1	4	037167-4-1
13		RETAINER, PULSE TRANSFORMER	06811	037278-1-1	5	037278-1-1
14		SLEEVE, THERMAL	06811	By description	A/R	
15		SCREW, PAN HEAD MACHINE: 4-40 X 5/16	MIL	MS51957-14	5	H1273
16		WASHER: Split-lock #4	MIL	MS35338-135	5	H0782

REPLACEABLE PARTS LIST

Equipment/Assembly Designation CENTER SUPPORT ASSEMBLY #037257-4-1 (Cont'd)

(1) Reference Designation		(2) Name of Component and Description	(3) Mfr's Code	(4) Manufacturer's Part Number	(5) No. Times Used	(6) Remarks/ SD Stock No.
ITEM	REF					
17		NUT: Hex 4-40		NAS671C4	5	H0249
18		SCREW, PAN HEAD MACHINE: 2-56 X 5/16	MIL	MS51957-4	4	H1275
19		WASHER: Split-lock #2	MIL	MS35337-77	4	H0377
20		NUT: Hex 2-56	MIL	MS35649-224	4	H0377
21		WASHER: Flat #2	MIL	MS15795-802	6	H0138
22		SCREW, PAN HEAD MACHINE: 2-56 X 1/4	MIL	MS51957-3	2	H0433
23		NUT: Hex 6-32, stainless	MIL	MS35649-264	3	H0762
24		WASHER: Flat #6	MIL	MS15795-805	3	H0759
25		WASHER: Split-lock #6	MIL	MS35338-136	2	H0783
26		CHANNEL, CATERPILLAR	06811	H1425	A/R	H1425

REPLACEABLE PARTS LIST

Equipment/Assembly Designation: GATED PULSE TRANSFORMER ASSEMBLY #037262-4-1

(1) Reference Designation		(2) Name of Component and Description	(3) Mfr's Code	(4) Manufacturer's Part Number	(5) No. Times Used	(6) Remarks/ SD Stock No.
ITEM	REF					
1		ASSEMBLY, GATED PULSE TRANSFORMER	06811	037262-4-1		037262-4-1
3		CORE, TOROID	02114	768T188-3E-2A	1	55023030
5		TAPE, VINYL	76381	88	A/R	H1993
7		WIRE LIST	06811	037262-5-1	1	037262-5-1
11		RTV 3145	06811	L-32	A/R	L-32
13		TUBING, SHRINK	06811	T-19	A/R	R-19
17		WIRE: #28 gauge	06811	W-500	A/R	W-500
18		WIRE: BIFILAR #28	06811	50303150	A/R	50303150

REPLACEABLE PARTS LIST

Equipment/Assembly Designation: PULSE TRANSFORMER ASSEMBLY #037167-4-1

(1) Reference Designation		(2) Name of Component and Description	(3) Mfr's Code	(4) Manufacturer's Part Number	(5) No. Times Used	(6) Remarks/ SD Stock No.
ITEM	REF					
1		ASSEMBLY, PULSE TRANSFORMER	06811	037167-4-1		037167-4-1
3		CORE, TOROID	02114	768T188-3E-2A	1	55023030
5		WIRE: #28 gauge	06811	W-500	A/R	W-500
7		TUBING, SHRINK	06811	T-19	A/R	T-19

REPLACEABLE PARTS LIST

Equipment/Assembly Designation FRONT GUARD ASSEMBLY #037270-4-1

(1) Reference Designation		(2) Name of Component and Description	(3) Mfr's Code	(4) Manufacturer's Part Number	(5) No. Times Used	(6) Remarks/ SD Stock No.
ITEM	REF					
1		ASSEMBLY, FRONT GUARD	06811	037270-1-1	1	037270-1-1
2		NUT, ANGLE: 6-32	22599	52LHA227-62	6	61039120
3		RIVET: .088 diameter	12014	By description	12	H1840
4	L2	COIL, REED: 6 Vdcw	71707	U-6	9	L0176
4	L3	COIL, REED: 6 Vdcw	71707	U-6	9	L0176
4	L4	COIL, REED: 6 Vdcw	71707	U-6	9	L0176
4	L5	COIL, REED: 6 Vdcw	71707	U-6	9	L0176
4	L6	COIL, REED: 6 Vdcw	71707	U-6	9	L0176
4	L7	COIL, REED: 6 Vdcw	71707	U-6	9	L0176
4	L8	COIL, REED: 6 Vdcw	71707	U-6	9	L0176
4	L9	COIL, REED: 6 Vdcw	71707	U-6	9	L0176
4	L10	COIL, REED: 6 Vdcw	71707	U-6	9	L0176
5		CORE, RELAY	06811	55017071	9	55017071
6		WASHER: Split-lock #6	MIL	MS35338-136	18	H0783
7		NUT: Hex 6-32	MIL	MS35649-264	36	H0762
8	303	LUG, SOLDER	73734	1955	1	E0118
9		SCREW, PAN HEAD MACHINE: 6-32 X 1/4	MIL	MS51957-26	1	H0986
10		WIRE TERMINAL: Female taper, crimp, 26-24GA	00779	A-85897-1	18	E0334
11		WASHER, SPRING	86928	5804-73-1	9	H2019
12		WASHER: Flat #6	86928	5710-23-10	9	H0484

REPLACEABLE PARTS LIST

Equipment/Assembly Designation REAR GUARD ASSEMBLY #037267-4-1

(1) Reference Designation		(2) Name of Component and Description	(3) Mfr's Code	(4) Manufacturer's Part Number	(5) No. Times Used	(6) Remarks/ SD Stock No.
ITEM	REF					
1		ASSEMBLY, REAR GUARD	06811	037267-1-1	1	037267-1-1
2		SPACER, TRANSISTOR	06811	037268-1-1	1	037268-1-1
3	Q1	SEMICONDUCTOR DEVICE TRANSISTOR: Silicon, PNP	04713	2N4918	2	Q0268
3	Q3	SEMICONDUCTOR DEVICE TRANSISTOR: Silicon, PNP	04713	2N4918	2	Q0268
4	Q2	SEMICONDUCTOR DEVICE TRANSISTOR: Silicon, NPN	04713	2N4921	2	Q0267
4	Q4	SEMICONDUCTOR DEVICE TRANSISTOR: Silicon, NPN	04713	2N4921	2	Q0267
5		Not used				
6		NUT: Angle #6	22599	52LHA227-62	6	61039120
7		RIVET: .088 diameter	12014	By description	12	H1840
8		SCREW, PAN HEAD MACHINE: 4-40 X 1/2	MIL	MS51957-17	2	H1065
9		CHANNEL, CATERPILLAR	06811	H1425	A/R	H1425
10		COMPOUND, THERMAL	05820	120-8	A/R	H1055
11		TIE, ANCHOR	06383	TMIS6	1	37021790
12		SCREW, PAN HEAD MACHINE: 6-32 X 3/8	MIL	MS51957-28	1	H0989
14		WASHER: Split-lock #6	MIL	MS35338-136	1	H0783
15		SCREW, FILISTER HEAD: 4-40 X 3/8, Nylon	95987	N-440-3/8FILNAT	4	60112890
16		WASHER: Split-lock #4	MIL	MS35338-135	2	H0782

REPLACEABLE PARTS LIST

Equipment/Assembly Designation LEFT HAND ANNUNCIATOR ASSEMBLY #037283-4-1

(1) Reference Designation		(2) Name of Component and Description	(3) Mfr's Code	(4) Manufacturer's Part Number	(5) No. Times Used	(6) Remarks/ SD Stock No.
ITEM	REF					
1		P.C. BOARD, ANNUNCIATOR TERMINAL	06811	037286-1-1	1	037286-1-1
2		BLOCK ANNUNCIATOR	06811	019976	1	019976
3		FILM, LEFT HAND ANNUNCIATOR	06811	037283-6-1	1	037283-6-1
4		ADHESIVE, PRESSURE SENSITIVE TRANSFER	26695	15A3249	A/R	H1768
5	DS1	LAMP, INCANDESCENT: 5 Vdcw	71744	CM-8666	3	I0050
5	DS2	LAMP, INCANDESCENT: 5 Vdcw	71744	CM-8666	3	I0050
5	DS3	LAMP, INCANDESCENT: 5 Vdcw	71744	CM-8666	3	I0050
7		TERMINAL: Swage bifurcated	88245	2000B	6	E0100
10		SCREW, PHILLIPS PAN HEAD: 2 X 1/4, type B	08547	By description	2	H1271

REPLACEABLE PARTS LIST

Equipment/Assembly Designation: RIGHT HAND ANNUNCIATOR ASSEMBLY #037280-4-1

(1) Reference Designation		(2) Name of Component and Description	(3) Mfr's Code	(4) Manufacturer's Part Number	(5) No. Times Used	(6) Remarks/ SD Stock No.
ITEM	REF					
		ASSEMBLY, RIGHT HAND ANNUNCIATOR	06811	037280-4-1		037280-4-1
1		P.C. BOARD, ANNUNCIATOR TERMINAL	06811	037286-1-1	1	037286-1-1
2		BLOCK ANNUNCIATOR	06811	019976	1	019976
3		FILM, RIGHT HAND, ANNUNCIATOR	06811	037280-7-1	1	037280-7-1
4		ADHESIVE, PRESSURE SENSITIVE TRANSFER	26695	15A3249	A/R	H1768
5	DS1	LAMP, INCANDESCENT: 5 Vdcw	71744	CM-8666	6	I0050
5	DS2	LAMP, INCANDESCENT: 5 Vdcw	71744	CM-8666	6	I0050
5	DS3	LAMP, INCANDESCENT: 5 Vdcw	71744	CM-8666	6	I0050
5	DS4	LAMP, INCANDESCENT: 5 Vdcw	71744	CM-8666	6	I0050
5	DS5	LAMP, INCANDESCENT: 5 Vdcw	71744	CM-8666	6	I0050
5	DS6	LAMP, INCANDESCENT: 5 Vdcw	71744	CM-8666	6	I0050
7		TERMINAL: Swage bifurcated	88245	2000B	12	E0100
10		SCREW, PHILLIPS PAN HEAD: 2 X 1/4, type B	08547	By description	2	H1271
11		WIRE LIST	06811	037280-5-1	1	037280-5-1

REPLACEABLE PARTS LIST

Equipment/Assembly Designation J201, FILTER LINE ASSEMBLY #031331-4-1

(1) Reference Designation ITEM	REF	(2) Name of Component and Description	(3) Mfr's Code	(4) Manufacturer's Part Number	(5) No. Times Used	(6) Remarks/ SD Stock No.
2		P.C. BOARD, LINE FILTER	06811	031331-1-1	1	031331-1-1
3	J1	CONNECTOR, POWER: Male chassis receptacle, (ac w/gnd)	82389	LAC3GD	1	J0566
4	L1	FILTER, CHOKE	76493	5250	2	L0166
4	L2	FILTER, CHOKE	76493	5250	2	L0166
5	C1	CAPACITOR, CERAMIC: .01 µF ±20%, 500 Vdcw	91418	Type SM	2	C0423
5	C2	CAPACITOR, CERAMIC: .01 µF ±20%, 500 Vdcw	91418	Type SM	2	C0423
8		TERMINAL, SWAGE	88245	1280B	4	E0141

CIRCUIT DESCRIPTION
A1, GUARDED CONTROL CIRCUIT
SCHEMATIC #037168-7-1

The A1 board in the Model 7110A has nine reed switches which are mounted on terminal lugs and positioned close to nine sets of magnetic pole pieces which project through the front plate of the guard structure. Through the operation of these nine switches the other reed relays on the analog circuit boards are set in the arrangement required for a particular range. The table shows which of the guarded control switches are closed on each range and function along with those on other boards which are also closed. Some of the entries in the table are the symbol ✓ which indicates that the switch is closed, but non-functional, for the function selected. These reeds are all on the option boards, the kilohms, current source, and the ac to dc converter board.

FRONT PANEL SWITCHES	A1 Filter 2	A1 Ratio 3	A1 .1 4	A1 1 5	A1 10 6	A1 100 7	A1 1,000 8	A1 VAC 9	A1 10	A2 DC Attenuator 27	A2 23	A2 24	A2 25	A2 26	A3 Input Amp. 19	A3 20	A6 Ref. P.S. 17	A6 18	A7 kΩ 11	A7 12	A7 13	A7 14	A7 15	A9 AC 1	A9 2	A9 3	A9 16	A9 22	A9 21
Filter	x									x																			
Ratio		x															x												
VDC .1			x								x				x			x	✓										
1				x							x					x		x	✓										
10					x						x							x	✓					✓					
100						x						x		x				x		✓					✓				
1,000							x						x	x				x			✓					✓			
* 10,000					x		x	x	x				x	x				x	x					x					
* VAC .1					x		x	x	x				x	x				x	x					x					
1				x				x								x		x	✓								x	x	
10					x			x								x		x	✓					x			x	x	
100						x		x								x		x		✓					x		x	x	
1,000							x	x								x		x			✓					x	x	x	
* 10,000					x		x	x	x									x						x					
kΩ .1			x						x		x				x			x	x			x	x						
1				x					x		x					x		x	x			x	x						
10					x				x		x							x	x			x	x	✓					
100						x			x		x							x		x		x	x		✓				
1,000							x		x		x							x			x	x	x			✓			
10,000									x		x							x				x	x						
TEST					x			x	x										x					x					x

☐ Open

x Closed and required

✓ Closed and not required

* Improper FUNCTION/RANGE combination

RANGE AND FUNCTION REED SWITCH CLOSURES
(GUARDED CONTROL AND RELATED BOARDS)

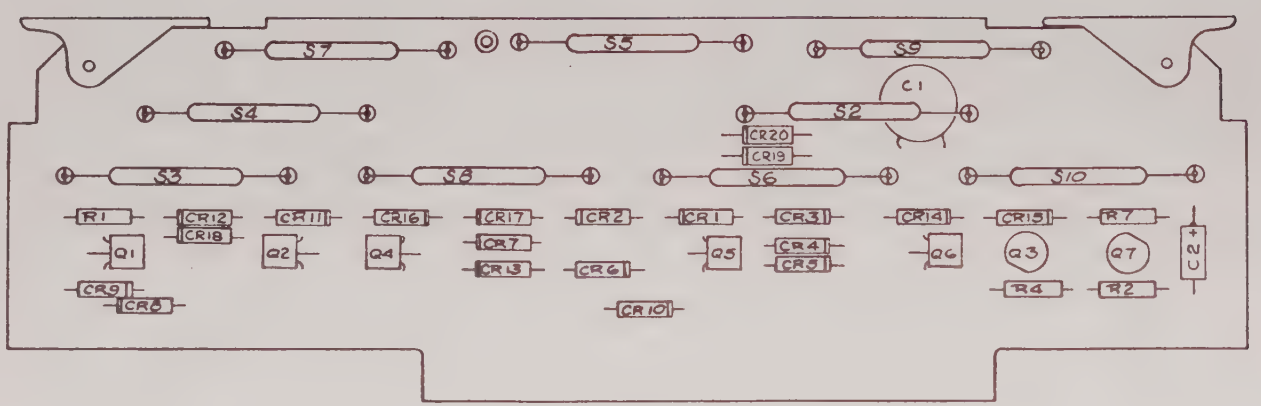

A1, GUARDED CONTROL ASSEMBLY #037168-4-1 REV C

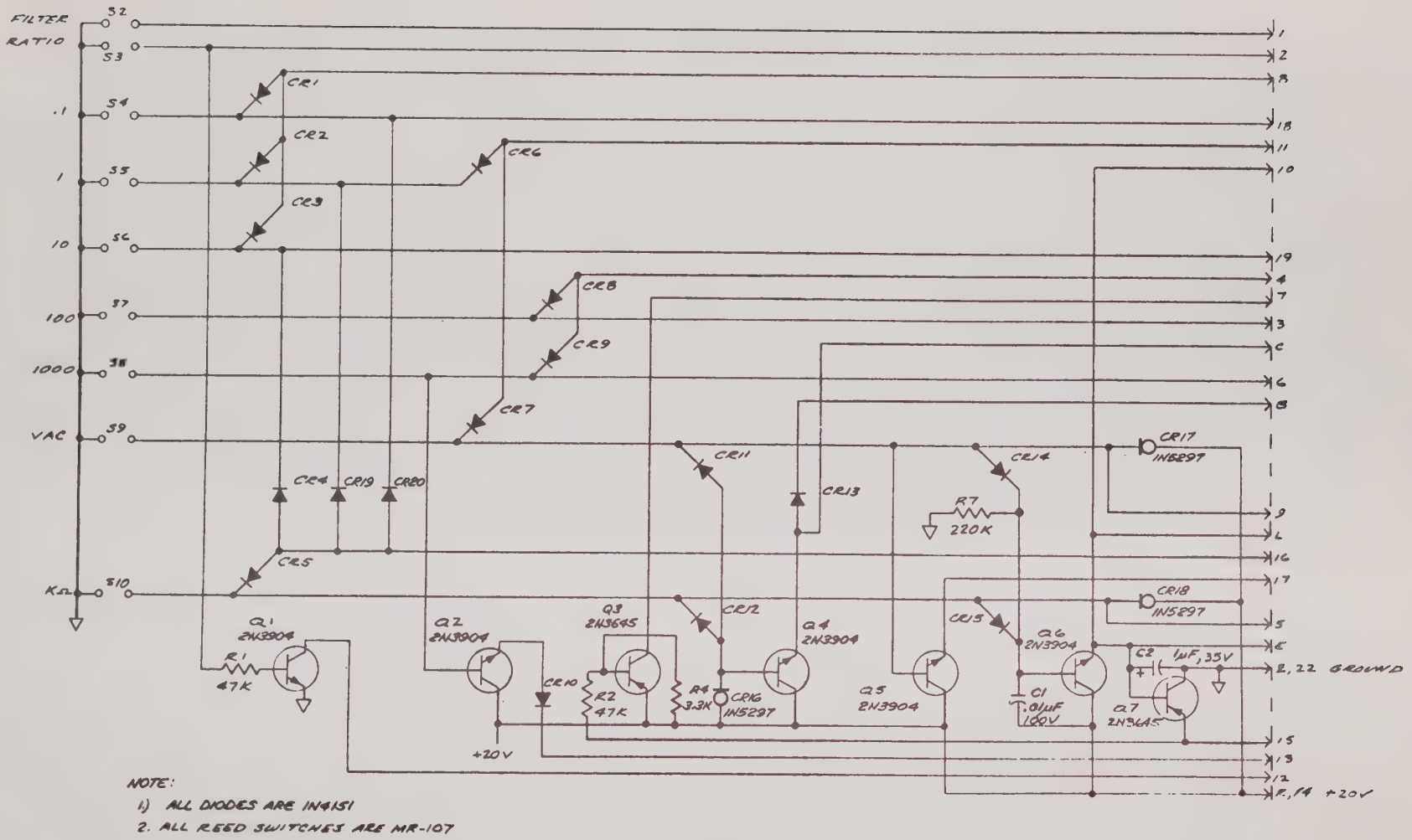

A1, GUARDED CONTROL SCHEMATIC #037168-7-1 REV C

REPLACEABLE PARTS LIST

Equipment/Assembly Designation A1, GUARDED CONTROL ASSEMBLY #037168-4-1

(1) Reference Designation	(2) Name of Component and Description	(3) Mfr's Code	(4) Manufacturer's Part Number	(5) No. Times Used	(6) Remarks/ SD Stock No.
					037168-4-1
	P.C. BOARD, GUARD CONTROL	06811	037168-1-1	1	037168-1-1
A1CR1	SEMICONDUCTOR DEVICE, DIODE: Silicon, 50 Vdcw, 150 mA	03508	1N4151	17	CR0150
A1CR2	SEMICONDUCTOR DEVICE, DIODE: Silicon, 50 Vdcw, 150 mA	03508	1N4151	17	CR0150
A1CR3	SEMICONDUCTOR DEVICE, DIODE: Silicon, 50 Vdcw, 150 mA	03508	1N4151	17	CR0150
A1CR4	SEMICONDUCTOR DEVICE, DIODE: Silicon, 50 Vdcw, 150 mA	03508	1N4151	17	CR0150
A1CR5	SEMICONDUCTOR DEVICE, DIODE: Silicon, 50 Vdcw, 150 mA	03508	1N4151	17	CR0150
A1CR6	SEMICONDUCTOR DEVICE, DIODE: Silicon, 50 Vdcw, 150 mA	03508	1N4151	17	CR0150
A1CR7	SEMICONDUCTOR DEVICE, DIODE: Silicon, 50 Vdcw, 150 mA	03508	1N4151	17	CR0150
A1CR8	SEMICONDUCTOR DEVICE, DIODE: Silicon, 50 Vdcw, 150 mA	03508	1N4151	17	CR0150
A1CR9	SEMICONDUCTOR DEVICE, DIODE: Silicon, 50 Vdcw, 150 mA	03508	1N4151	17	CR0150
A1CR10	SEMICONDUCTOR DEVICE, DIODE: Silicon, 50 Vdcw, 150 mA	03508	1N4151	17	CR0150
A1CR11	SEMICONDUCTOR DEVICE, DIODE: Silicon, 50 Vdcw, 150 mA	03508	1N4151	17	CR0150
A1CR12	SEMICONDUCTOR DEVICE, DIODE: Silicon, 50 Vdcw, 150 mA	03508	1N4151	17	CR0150

REPLACEABLE PARTS LIST

Equipment/Assembly Designation A1, GUARDED CONTROL ASSEMBLY #037168-4-1 (Cont'd)

(1) Reference Designation	(2) Name of Component and Description	(3) Mfr's Code	(4) Manufacturer's Part Number	(5) No. Times Used	(6) Remarks/ SD Stock No.
A1CR13	SEMICONDUCTOR DEVICE, DIODE: Silicon, 50 Vdcw, 150 mA	03508	1N4151	17	CR0150
A1CR14	SEMICONDUCTOR DEVICE, DIODE: Silicon, 50 Vdcw, 150 mA	03508	1N4151	17	CR0150
A1CR15	SEMICONDUCTOR DEVICE, DIODE: Silicon, 50 Vdcw, 150 mA	03508	1N4151	17	CR0150
A1CR16	SEMICONDUCTOR DEVICE, DIODE: Silicon, 100 Vdcw, 1.0 mA	04713	1N5297	3	CR0389
A1CR17	SEMICONDUCTOR DEVICE, DIODE: Silicon, 100 Vdcw, 1.0 mA	04713	1N5297	3	CR0389
A1CR18	SEMICONDUCTOR DEVICE, DIODE: Silicon, 100 Vdcw, 1.0 mA	04713	1N5297	3	CR0389
A1CR19	SEMICONDUCTOR DEVICE, DIODE: Silicon, 50 Vdcw, 150 mA	03508	1N4151	17	CR0150
A1CR20	SEMICONDUCTOR DEVICE, DIODE: Silicon, 50 Vdcw, 150 mA	03508	1N4151	17	CR0150
A1Q1	SEMICONDUCTOR DEVICE, TRANSISTOR: Silicon, NPN	04713	2N3904	5	Q0247
A1Q2	SEMICONDUCTOR DEVICE, TRANSISTOR: Silicon, NPN	04713	2N3904	5	Q0247
A1Q3	SEMICONDUCTOR DEVICE, TRANSISTOR: Silicon, PNP	07263	2N3645	2	Q0215
A1Q4	SEMICONDUCTOR DEVICE, TRANSISTOR: Silicon, NPN	04713	2N3904	5	Q0247
A1Q5	SEMICONDUCTOR DEVICE, TRANSISTOR: Silicon, NPN	04713	2N3904	5	Q0247

REPLACEABLE PARTS LIST

Equipment/Assembly Designation A1, GUARDED CONTROL ASSEMBLY #037168-4-1 (Cont'd)

(1) Reference Designation	(2) Name of Component and Description	(3) Mfr's Code	(4) Manufacturer's Part Number	(5) No. Times Used	(6) Remarks/ SD Stock No.
A1Q6	SEMICONDUCTOR DEVICE, TRANSISTOR: Silicon, NPN	04713	2N3904	5	Q0247
A1Q7	SEMICONDUCTOR DEVICE, TRANSISTOR: Silicon, PNP	07263	2N3645	2	Q0215
A1C1	CAPACITOR, CERAMIC: .01 µF +80-20%, 100 Vdcw	91418	TA110	1	C0556
A1C2	CAPACITOR, TANT: 1 µF ±10%, 35 Vdcw	56289	150D105X9035A2	1	C0524
A1R1	RESISTOR, COMP: 47 kΩ ±5%, 1/4 W	01121	CB4735	2	R0777
A1R2	RESISTOR, COMP: 47 kΩ ±5%, 1/4 W	01121	CB4735	2	R0777
A1R3	Not used				
A1R4	RESISTOR, COMP: 3.3 kΩ ±5%, 1/4 W	01121	CB3325	1	R0742
A1R5	Not used				
A1R6	Not used				
A1R7	RESISTOR, COMP: 220 kΩ ±5%, 1/4 W	01121	CB2245	1	R0967
A1S2	SWITCH, REED: .5 A 200 V	95348	MR-107 15-30AT	9	100005
A1S3	SWITCH, REED: .5 A 200 V	95348	MR-107 15-30AT	9	100005
A1S4	SWITCH, REED: .5 A 200 V	95348	MR-107 15-30AT	9	100005
A1S5	SWITCH, REED: .5 A 200 V	95348	MR-107 15-30AT	9	100005
A1S6	SWITCH, REED: .5 A 200 V	95348	MR-107 15-30AT	9	100005

REPLACEABLE PARTS LIST

Equipment/Assembly Designation A1, GUARDED CONTROL ASSEMBLY #037168-4-1 (Cont'd)

(1) Reference Designation	(2) Name of Component and Description	(3) Mfr's Code	(4) Manufacturer's Part Number	(5) No. Times Used	(6) Remarks/ SD Stock No.
A1S7	SWITCH, REED: .5 A 200 V	95348	MR-107 15-30AT	9	100005
A1S8	SWITCH, REED: .5 A 200 V	95348	MR-107 15-30AT	9	100005
A1S9	SWITCH, REED: .5 A 200 V	95348	MR-107 15-30AT	9	100005
A1S10	SWITCH, REED: .5 A 200 V	95348	MR-107 15-30AT	9	100005
	SWAGE, SPACER: 6-32	88245	1530 B 1/2	1	E0262
	EXTRACTOR, P.C., PLAIN	51495	1743	1	H1743
	EXTRACTOR, P.C., HOT STAMP, A1	06811	03984201	1	03984201
	CONNECTOR, P.C.: Single pin 10/inch, male post	00779	86090-4	18	E0332
	PIN, SPRING	73957	50-094-0250	2	H1083

CIRCUIT DESCRIPTION
A2, DC ATTENUATOR & FILTER
SCHEMATIC #037279-7-1

The dc attenuator is assembled with a set of precision resistors having a low-temperature coefficient and a low-voltage coefficient. There is no attenuation of the input voltage on the .1, 1, and 10 volt ranges. The relays used for the switching are special assemblies having very-low, self-generated thermal emfs. The resistors in series with the input amplifier, A2R1, A2R9, A2R11, and A2R12, are precision types selected for low-thermal emf generation, and they have a combined power rating sufficient to handle the dissipation due to a maximum rated input voltage when the instrument is on one of its more sensitive ranges. The capacitors, A2C1, A2C2, and A2C3, are connected by A2S27 to the signal common to provide filtering of normal mode signals. Filtering is about 25 dB at 50 Hz and increases at about 12 dB per octave. A2R4 is adjusted to obtain correct calibration on the 100-volt range and A2R6 is adjusted for the 1000-volt range.

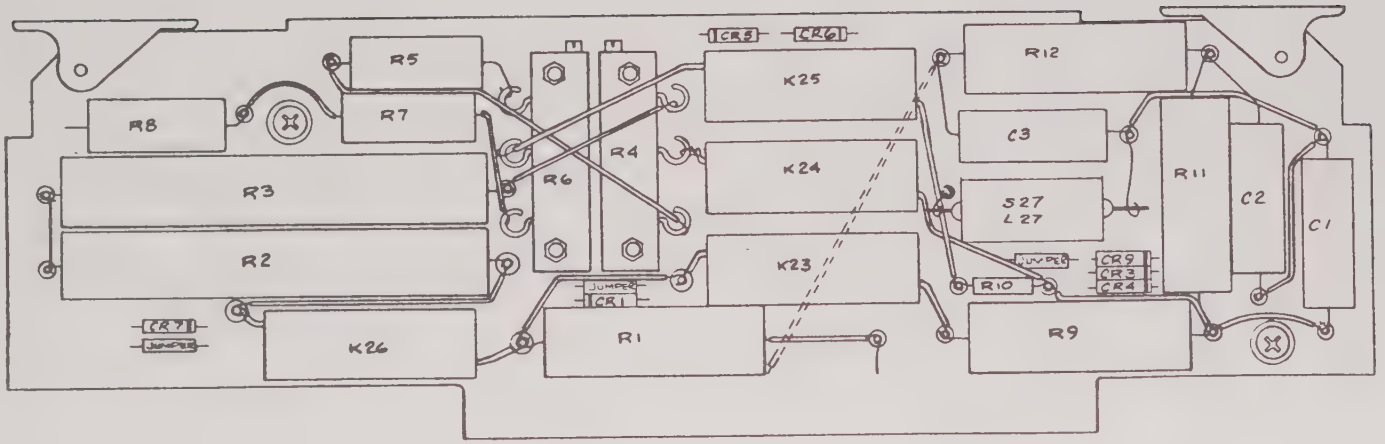

A2, DC ATTENUATOR & FILTER ASSEMBLY #037279-4-1 REV D

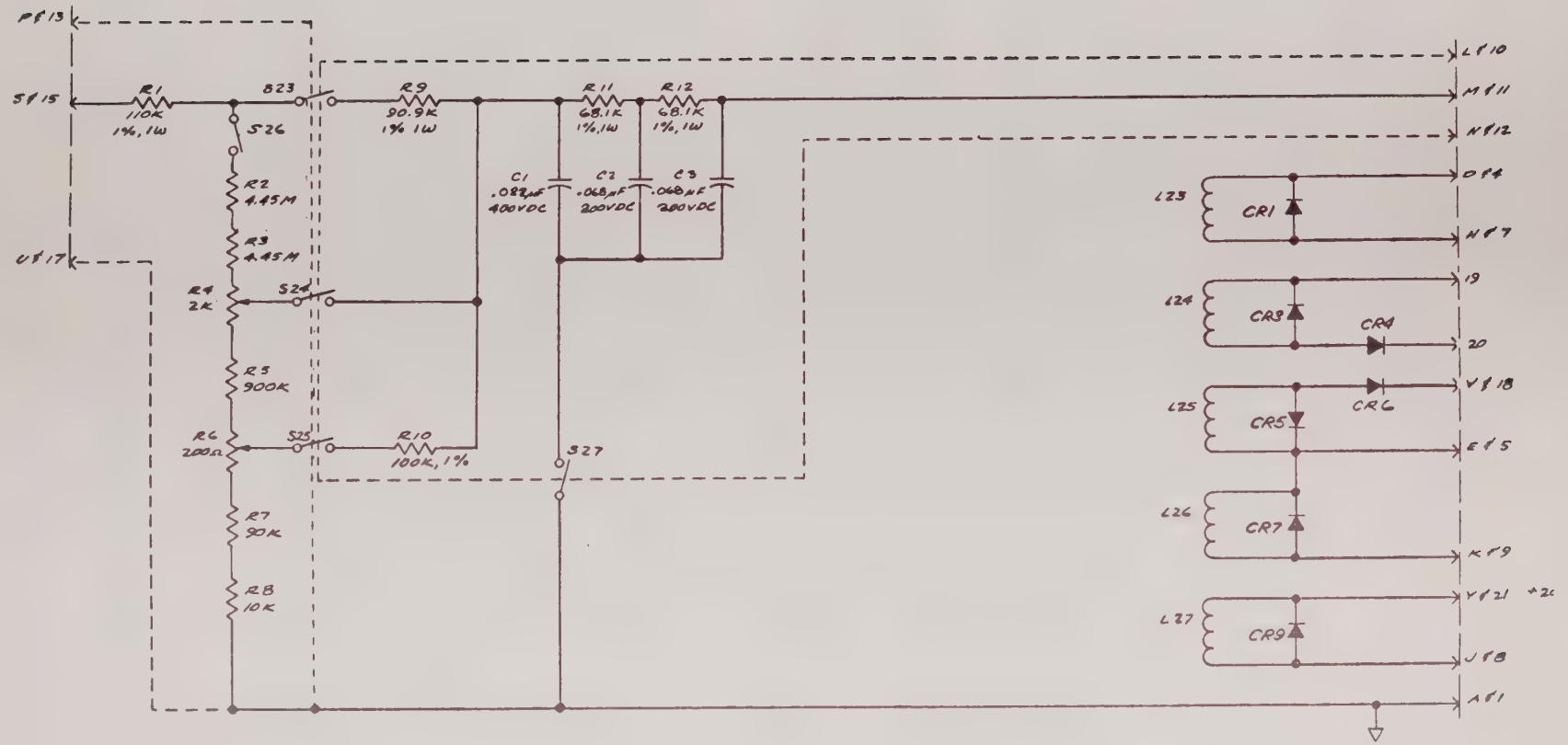

NOTE:
1. ALL DIODES - IN4151
2. K23, 24, 25 & 26 - 37961-4-1
3. S27 - MR106; L27 - U32P.

A2, DC ATTENUATOR & FILTER SCHEMATIC #037279-7-1 REV B

REPLACEABLE PARTS LIST

Equipment/Assembly Designation: A2, DC ATTENUATOR & FILTER ASSY #037279-4-1

(1) Reference Designation	(2) Name of Component and Description	(3) Mfr's Code	(4) Manufacturer's Part Number	(5) No. Times Used	(6) Remarks/ SD Stock No.
					037279-4-1
	P.C. BOARD, DC ATTENUATOR & FILTER ASSEMBLY	06811	037279-1-1	1	037279-1-1
A2C1	CAPACITOR, POLYPROPYLENE: .022 µF ±10%, 400 Vdcw	20908	446A2202A4K	1	C1264
A2C2	CAPACITOR, POLYPROPYLENE: .068 µF ±10%, 200 Vdcw	20908	446A6802A2K	2	C1265
A2C3	CAPACITOR, POLYPROPYLENE: .068 µF ±10%, 200 Vdcw	20908	446A6802A2K	2	C1265
A2CR1	SEMICONDUCTOR DEVICE, DIODE: Silicon, 50 Vdcw, 150 mA	03508	1N4151	7	CR0150
A2CR2	Not used				
A2CR3	SEMICONDUCTOR DEVICE, DIODE: Silicon, 50 Vdcw, 150 mA	03508	1N4151	7	CR0150
A2CR4	SEMICONDUCTOR DEVICE, DIODE: Silicon, 50 Vdcw, 150 mA	03508	1N4151	7	CR0150
A2CR5	SEMICONDUCTOR DEVICE, DIODE: Silicon, 50 Vdcw, 150 mA	03508	1N4151	7	CR0150
A2CR6	SEMICONDUCTOR DEVICE, DIODE: Silicon, 50 Vdcw, 150 mA	03508	1N4151	7	CR0150
A2CR7	SEMICONDUCTOR DEVICE, DIODE: Silicon, 50 Vdcw, 150 mA	03508	1N4151	7	CR0150
A2CR8	Not used				
A2CR9	SEMICONDUCTOR DEVICE, DIODE: Silicon, 50 Vdcw, 150 mA	03508	1N4151	7	CR0150

REPLACEABLE PARTS LIST

Equipment/Assembly Designation A2, DC ATTENUATOR & FILTER ASSY #037279-4-1 (Cont'd)

(1) Reference Designation	(2) Name of Component and Description	(3) Mfr's Code	(4) Manufacturer's Part Number	(5) No. Times Used	(6) Remarks/ SD Stock No.
A2CR10	Not used				
A2K23	ASSEMBLY, REED SWITCH: High voltage	06811	037461-4-1	4	037461-4-1
A2K24	ASSEMBLY, REED SWITCH: High voltage	06811	037461-4-1	4	037461-4-1
A2K25	ASSEMBLY, REED SWITCH: High voltage	06811	037461-4-1	4	037461-4-1
A2K26	ASSEMBLY, REED SWITCH: High voltage	06811	037461-4-1	4	037461-4-1
A2L27	COIL, REED: 32 Vdcw	71707	U-32-P	1	21103130
A2R2,3,5,7,8	RESISTOR SET: Matched set for M7110A attenuator	06811	039721	1	039721
A2R1	RESISTOR: 110 kΩ ±1%, .75 W, 10 PPM, low thermal, precision wire wound	27282	LR-20	1	R2805
A2R2	Part of matched set for M7110A, 4.45 MΩ				
A2R3	Part of matched set for M7110A, 4.45 MΩ				
A2R4	RESISTOR, POTENTIOMETER, CERAMIC: 2 kΩ ±10%, 3/4 W, 22-turn, metal	73138	78SR2K	1	R2826
A2R5	Part of matched set for M7110A, 900 kΩ				

REPLACEABLE PARTS LIST

Equipment/Assembly Designation A2. DC ATTENUATOR & FILTER ASSY #037279-4-1 (Cont'd)

(1) Reference Designation	(2) Name of Component and Description	(3) Mfr's Code	(4) Manufacturer's Part Number	(5) No. Times Used	(6) Remarks/ SD Stock No.
A2R6	RESISTOR, POTENTIOMETER, CERAMIC: 200 Ω ±10%, 3/4 W 22-turn, metal	73138	78SR200	1	R2825
A2R7	Part of matched set for M7110A, 90 kΩ				
A2R8	Part of matched set for M7110A, 10 kΩ				
A2R9	RESISTOR: 90.9 k 1%, .75 W, 10 PPM, low thermal, precision wire wound	27282	LR-20	1	R2804
A2R10	RESISTOR: 100 k 1%, 1 W, 50 PPM, metal film	06811	RN55C1003F	1	02418010
A2R11	RESISTOR: 68.1 kΩ ±1%, .75 W, 10 PPM, low thermal, precision wire wound				
A2R12	RESISTOR: 68.1 kΩ ±1%, .75 W, 10 PPM, low thermal, precision wire wound				
A2S27	SWITCH, REED: 200 Vdcw	95348	MR107	1	S0326
	SPACER, WASHER: Teflon	08863	By Description	4	H2024
	TERMINAL, PRESS: .515 L	98921	001-1007	1	E0335
	EXTRACTOR, P.C., PLAIN	51495	1743	1	H1743
	EXTRACTOR, P.C., HOT STAMP, A2	06811	039842-2	1	039842-2
	TERMINAL, PRESS: .350 L	98921	004-1007	15	E0333

REPLACEABLE PARTS LIST

Equipment/Assembly Designation A2. DC ATTENUATOR & FILTER ASSY #037279-4-1 (Cont'd)

(1) Reference Designation	(2) Name of Component and Description	(3) Mfr's Code	(4) Manufacturer's Part Number	(5) No. Times Used	(6) Remarks/ SD Stock No.
	TERMINAL, PRESS: .455 L	71279	4034-3-0519	4	51024460
	SHIELD, ATTENUATOR P.C. BOARD	06811	037166-1-1	1	037166-1-1
	TAPE, TEFLON			A/R	74041520
	SCREW: 2-56 X 5/8, nylon	95987	N-256-5/8 BH NAT	4	H2029
	NUT: 2-56, Hex, nylon, black	95987	N-256-X	4	H2028
	SPACER, WASHER: Teflon	08863	By description	4	H2024
	PIN, SPRING	73957	50-094-0250	2	H1083
	STANDOFF: Swage 4-40	71279		2	E0127
	SCREW, PAN HEAD MACHINE: 4-40 X 1/4		MS51957-13	2	H0440
	WASHER: Flat #8		MS15795-803	2	H0758
	WASHER: Split-lock #4		MS35338-135	2	H0782

REPLACEABLE PARTS LIST

Equipment/Assembly Designation: REED SWITCH ASSEMBLY (HIGH VOLTAGE) #037461-4-1

(1) Reference Designation		(2) Name of Component and Description	(3) Mfr's Code	(4) Manufacturer's Part Number	(5) No. Times Used	(6) Remarks/ SD Stock No.
ITEM	REF					
3		COIL, REED: 32 Vdcw	71707	U-32-P	1	21103130
5		SWITCH, REED: 1 kV	06811	037288	1	037288
7		COUPLER, THERMAL	06811	037156	1	037156
9		CASE, LOW THERMAL RELAY	06811	037461-6-1	1	037461-6-1

CIRCUIT DESCRIPTION
A3, INPUT AMPLIFIER
SCHEMATIC #037176-7-1

The input amplifier, A3 board, transforms the input voltage into a current which is used to charge the capacitor in the integrator. It includes range changing resistors so that the full-scale output current can be generated with either 10 volts, 1 volt or 0.1 volt in. Separate supplies for the amplifier element are provided so that all the load current, I_x, will flow through the selected feedback resistors A3R14 through R18. The gain of the amplifier element is very high so that the voltage between the two input terminals will approach zero and thus, the voltage drop in the feedback resistors will be nearly equal to the input voltage.

The nominal values of A3R14 through R18 are 100,000 Ω on the 10 volt scale, 10,000 Ω on the 1 volt scale, and 1,000.0 Ω on the .1 volt scale. The nominal value of I_x at full scale is 100 μA. The assembly, A3A1, is a JFET input operational amplifier selected for very-low drift with temperature and time. It drives a two-stage complementary type amplifier which has a very-high output impedance and isolates the input of the voltmeter from the switching transients associated with the analog to digital conversion.

As an example of the operation of these elements consider the case when 100 μA flows into the output terminal R&14. A3Q4 will be conducting and about 3.3 volts will be developed across A3R9, the base of A3Q4 will be about 3.9 volts above the -27 volt supply, and there will be a collector current of about 120 μA in A3Q2. Under these conditions the drop across A3R6 will be about 5.5 volts and the output of the amplifier at the base of A3Q2 will be about -6.1 volts. All paths through this circuit from R&14 to P&13 pass through A3R14 through R18, and the only current is the load current. For current out of the assembly A3Q1 and A3Q3 are on.

The power for the amplifier is supplied from a separate triple shielded winding on the power transformer, the rectifiers and main filter capacitors are in a guarded shield on the Analog Mother Board, and the regulators are on the A3 plug-in board with the other elements of the amplifier.

Clamping circuits to protect the amplifier from over-range voltages include A3CR12 and A3CR13 directly across the input-terminals and A3CR1, 2, 3, 4, 5, and 6 from the output of the operational amplifier to its input. When the output of the operational amplifier has a magnitude greater than 9.0 volts, either A3CR4 or A3CR6 will breakdown and conduct current through A3CR3 or A3CR5 respectively, and when the magnitude of the voltage across R1 exceeds about .6 volts, then A3CR1 or A3CR2 will conduct current into the amplifier input. This increased current will cause a voltage drop in the series resistance elements between

the amplifier input and the instruments HI input terminal. These resistance elements can sustain a 1 kV voltage drop without deleterious effects. The resistor network, A2 and A3R30 allow circuit connections for trimming any offset voltage, which might appear between operational amplifiers. The connection between terminal 1 and one of the terminals 2 through 7 is made during the initial calibration of the instrument. Changing the input amplifier may require a connection change at this assembly.

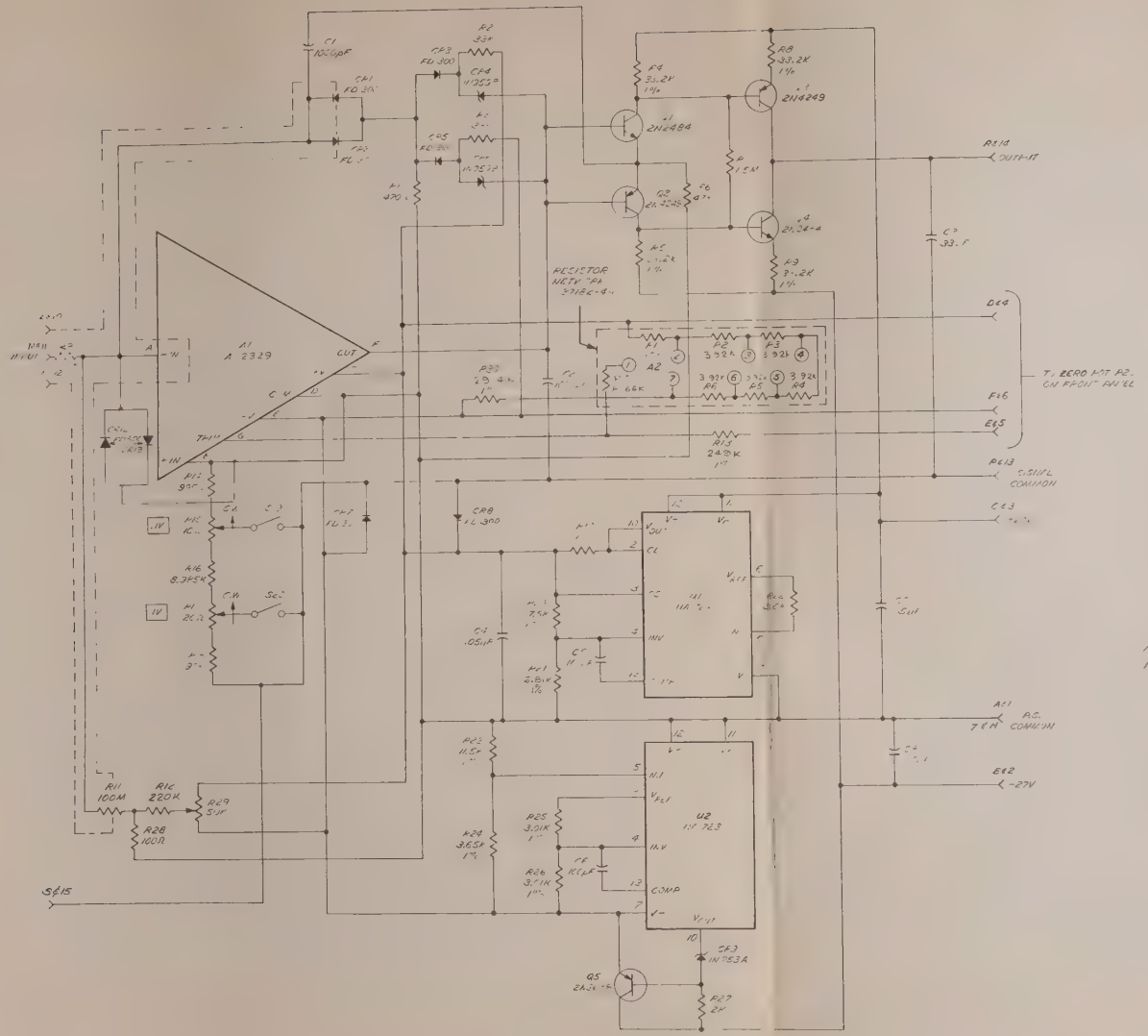

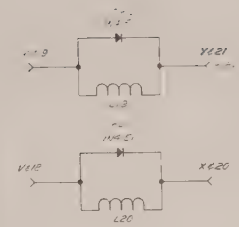

NOTE
1. S19 & L19 = K19 S20 & L20 = K20 DWG # 37462-4-1

A3, INPUT AMPLIFIER
SCHEMATIC #037176-7-1 REV C

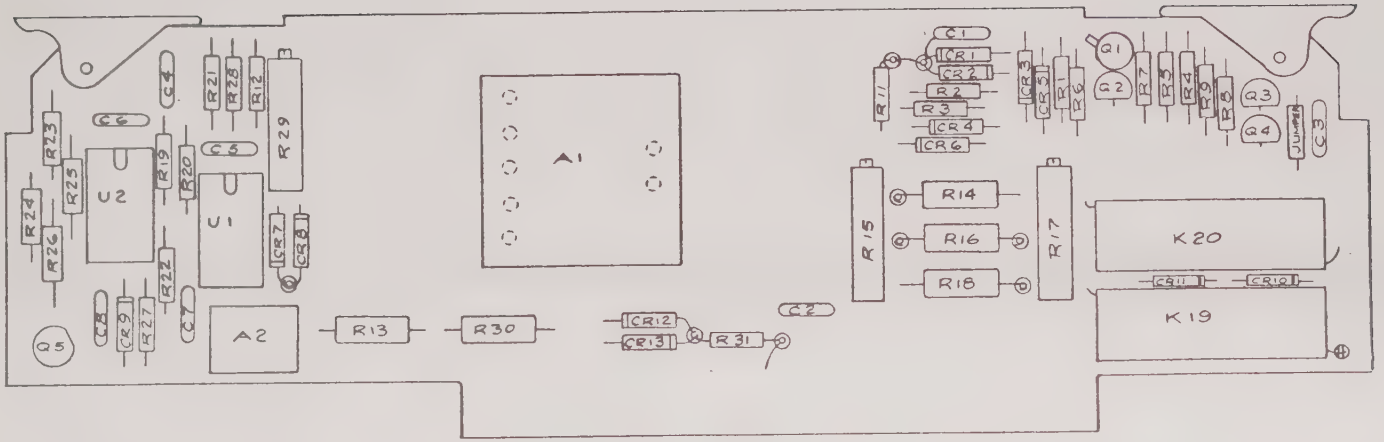

A3, INPUT AMPLIFIER ASSEMBLY #037176-4-1 REV C

REPLACEABLE PARTS LIST

Equipment/Assembly Designation A3, INPUT AMPLIFIER ASSEMBLY #037176-4-1

(1) Reference Designation	(2) Name of Component and Description	(3) Mfr's Code	(4) Manufacturer's Part Number	(5) No. Times Used	(6) Remarks/ SD Stock No.
	P.C. BOARD, INPUT AMPLIFIER	06811	037176-1-1	1	037176-1-1
A3C1	CAPACITOR, GLASS: 1000 pF ±10%, 100 Vdcw, radial lead	16299	CY07C-102K	1	C1270
A3C2	CAPACITOR, MICA: 1000 pF ±5%, 100 Vdcw	72136	DM15FA102J0	1	C1144
A3C3	CAPACITOR, MICA: 33 pF ±5%, 500 Vdcw	72136	DM15ED330J0	1	C0877
A3C4	CAPACITOR, CERAMIC: .05 µF +80-20%, 50 Vdcw	56289	TGS50	3	C0708
A3C5	CAPACITOR, MICA: 100 pF ±5%, 500 Vdcw	72136	DM15ED101J0	2	C0874
A3C6	CAPACITOR, MICA: 100 pF ±5%, 500 Vdcw	72136	DM15ED101J0	2	C0874
A3C7	CAPACITOR, CERAMIC: .05 µF +80-20%, 50 Vdcw	56289	TGS50	3	C0708
A3C8	CAPACITOR, CERAMIC: .05 µF +80-20%, 50 Vdcw	56289	TGS50	3	C0708
A3CR1	SEMICONDUCTOR DEVICE, DIODE: Silicon, 125 Vdcw, high conductance	13715	FD300	8	26012320
A3CR2	SEMICONDUCTOR DEVICE, DIODE: Silicon, 125 Vdcw, high conductance	13715	FD300	8	26012320

REPLACEABLE PARTS LIST

Equipment/Assembly Designation A3 INPUT AMPLIFIER ASSEMBLY #037176-4-1 (Cont'd)

(1) Reference Designation	(2) Name of Component and Description	(3) Mfr's Code	(4) Manufacturer's Part Number	(5) No. Times Used	(6) Remarks/ HP Stock No.
A3CR3	SEMICONDUCTOR DEVICE, DIODE: Silicon, 125 Vdcw, high conductance	13715	FD300	8	26012320
A3CR4	SEMICONDUCTOR DEVICE, DIODE, ZENER: 8.2 Vdcw, ±5%, .4 W	04713	1N959B	2	CR0146
A3CR5	SEMICONDUCTOR DEVICE, DIODE: Silicon, 125 Vdcw, high conductance	13715	FD300	8	26012320
A3CR6	SEMICONDUCTOR DEVICE, DIODE, ZENER: 8.2 Vdcw, ±5%, .4 W	04713	1N959B	2	CR0146
A3CR7	SEMICONDUCTOR DEVICE, DIODE: Silicon, 125 Vdcw, high conductance	13715	FD300	8	26012320
A3CR8	SEMICONDUCTOR DEVICE, DIODE: Silicon, 125 Vdcw, high conductance	13715	FD300	8	26012320
A3CR9	SEMICONDUCTOR DEVICE, DIODE ZENER: 6.2 Vdcw, ±5%, .4 W	03877	1N753A	1	CR0161
A3CR10	SEMICONDUCTOR DEVICE, DIODE: Silicon, 50 Vdcw, 150 mA	03508	1N4151	2	CR0150
A3CR11	SEMICONDUCTOR DEVICE, DIODE: Silicon, 50 Vdcw, 150 mA	03508	1N4151	2	CR0150
A3CR12	SEMICONDUCTOR DEVICE, DIODE: Silicon, 125 Vdcw, high conductance	13715	FD300	8	26012320
A3CR13	SEMICONDUCTOR DEVICE, DIODE: Silicon, 125 Vdcw, high conductance	13715	FD300	8	26012320

REPLACEABLE PARTS LIST

Equipment/Assembly Designation A3, INPUT AMPLIFIER ASSEMBLY #037176-4-1 (Cont'd)

(1) Reference Designation	(2) Name of Component and Description	(3) Mfr's Code	(4) Manufacturer's Part Number	(5) No. Times Used	(6) Remarks/ SD Stock No.
A3R1	RESISTOR, COMP: 470 Ω ±5%, 1/4 W	01121	CB4715	1	R1044
A3R2	RESISTOR, COMP: 33 kΩ ±5%, 1/4 W	01121	CB3335	2	R0780
A3R3	RESISTOR, COMP: 33 kΩ ±5%, 1/4 W	01121	CB3335	2	R0780
A3R4	RESISTOR, METAL FILM: 33.2 kΩ ±1%, .12 W, 100 PPM	19701	MF5C-D-3322-F	4	R2770
A3R5	RESISTOR, METAL FILM: 33.2 kΩ ±1%, .12 W, 100 PPM	19701	MF5C-D-3322-F	4	R2770
A3R6	RESISTOR, COMP: 47 kΩ ±5%, 1/4 W	01121	CB4735	1	R0777
A3R7	RESISTOR, COMP: 1.5 MΩ ±5%, 1/4 W	01121	CB1555	1	R1204
A3R8	RESISTOR, METAL FILM: 33.2 kΩ ±1%, .12 W, 100 PPM	19701	MF5C-D-3322-F	4	R2770
A3R9	RESISTOR, METAL FILM: 33.2 kΩ ±1%, .12 W, 100 PPM	19701	MF5C-D-3322-F	4	R2770
A3R10	Not used				
A3R11	RESISTOR, COMP: 100 MΩ ±5%, 1/4 W	01121	CB1075	1	R2557
A3R12	RESISTOR, COMP: 220 kΩ ±5%, 1/4 W	01121	CB2245	1	R0967
A3R13	RESISTOR, METAL FILM: 249 kΩ ±1%, .12 W, 50 PPM	06811	RN60C2493F	1	02394740

REPLACEABLE PARTS LIST

Equipment/Assembly Designation A3, INPUT AMPLIFIER ASSEMBLY #037176-4-1 (Cont'd)

(1) Reference Designation	(2) Name of Component and Description	(3) Mfr's Code	(4) Manufacturer's Part Number	(5) No. Times Used	(6) Remarks/ SD Stock No.
A3R14	RESISTOR, METAL FILM: 995 Ω ±.05%, .12 W, 5 PPM	75042	MAR6	1	R2727
A3R15	RESISTOR, POTENTIOMETER, CERAMIC: 10Ω ±20%, 3/8 W, 15-turn, P.C. mt. end adjust	73138	89PR10	1	R2786
A3R16	RESISTOR, METAL FILM: 8.985 Ω ±.05%, .12 W, 5PPM	75042	AR6	1	R2728
A3R17	RESISTOR, POTENTIOMETER, CERAMIC: 20Ω ±20%, 3/8 W, 15-turn, P.C. mt., end adjust	73138	89PR20	1	R2784
A3R18	RESISTOR, METAL FILM: 90.0 kΩ ±.05%, .12 W, 5 PPM	75042	MAR6	1	R2730
A3R19	RESISTOR, COMP: 10 Ω ±5%, 1/4 W	01121	CB1005	1	R0739
A3R20	RESISTOR, METAL FILM: 7.50 kΩ ±1%, 1/4 W, 25 PPM	91637	MFF 1/8 T9	1	R2513
A3R21	RESISTOR, METAL FILM: 6.81 kΩ ±5%, 1/4 W, 100 PPM	91637	MFF 1/8	1	R2718
A3R22	RESISTOR, COMP: 3.6 kΩ ±5%, 1/4 W	01121	CB3625	1	R0938
A3R23	RESISTOR, METAL FILM: 11.5 kΩ ±1%, 1/4 W, 50 PPM	91637	MFF 1/8 T2	1	R2569
A3R24	RESISTOR, METAL FILM: 3.65 kΩ ±1%, 1/4 W, 100 PPM	91637	MF 1/10 T1	1	02373500
A3R25	RESISTOR, METAL FILM: 3.01 kΩ ±1%, 1/4 W, 100 PPM	19701	MF5C-D-3011-F	2	R2338

REPLACEABLE PARTS LIST

Equipment/Assembly Designation A3, INPUT AMPLIFIER ASSEMBLY #037176-4-1 (Cont'd)

(1) Reference Designation	(2) Name of Component and Description	(3) Mfr's Code	(4) Manufacturer's Part Number	(5) No. Times Used	(6) Remarks/ SD Stock No.
A3R26	RESISTOR, METAL FILM: 3.01 kΩ ±1%, 1/4 W, 100 PPM	19701	MF5C-D-3011-F	2	R2338
A3R27	RESISTOR, COMP: 2.0 kΩ ±5%, 1/4 W	01121	CB2025	1	R0734
A3R28	RESISTOR, COMP: 100 Ω ±5%, 1/4 W	01121	CB1015	1	R0966
A3R29	RESISTOR, POTENTIOMETER, CERAMIC: 50 kΩ ±10%, 3/8 W, 15-turn, P.C. mt., end adjust	73138	89PR50K	1	R2783
A3R30	RESISTOR, METAL FILM: 29.4 kΩ ±1%, 1/8 W, 100 PPM	19701	MF5C-D-2942-F	1	R2766
A3R31	RESISTOR, COMP: 10 kΩ ±5%, 1/4 W	01121	CB1035	1	R0766
A3Q1	SEMICONDUCTOR DEVICE, TRANSISTOR: N Channel, NPN	07263	2N2484	2	26010670
A3Q2	SEMICONDUCTOR DEVICE, TRANSISTOR: Silicon, PNP	07263	2N4249	2	26013260
A3Q3	SEMICONDUCTOR DEVICE, TRANSISTOR: Silicon, PNP	07263	2N4249	2	26013260
A3Q4	SEMICONDUCTOR DEVICE, TRANSISTOR: N Channel, NPN	07263	2N2484	2	26010670
A3Q5	SEMICONDUCTOR DEVICE, TRANSISTOR: Silicon, PNP	07263	2N3638	1	Q0181
A3U1	INTEGRATED CIRCUIT: Linear voltage regulator	27014	LM723CN	2	025761
A3U2	INTEGRATED CIRCUIT: Linear voltage regulator	27014	LM723CN	2	025761

REPLACEABLE PARTS LIST

Equipment/Assembly Designation A3, INPUT AMPLIFIER ASSEMBLY #037176-4-1 (Cont'd)

(1) Reference Designation	(2) Name of Component and Description	(3) Mfr's Code	(4) Manufacturer's Part Number	(5) No. Times Used	(6) Remarks/ SD Stock No.
A3A1	AMPLIFIER, HYBRID OPERATIONAL	33967	A2329	1	025793
A3A2	ASSEMBLY, RESISTOR NETWORK	06811	037182-4-1	1	037182-4-1
	EXTRACTOR, P.C., PLAIN	51495	1743	1	H1743
	EXTRACTOR, P.C., HOT STAMP, A3	06811	039842-1	1	039842-1
	CONNECTOR, SOCKET PIN	06776	PS-402-44	7	X0182
A3K19	SWITCH, REED: Low voltage	06811	037462-4-1	2	037462-4-1
A3K20	SWITCH, REED: Low voltage	06811	037462-4-1	2	037462-4-1
	TERMINAL, PRESS: .175 L	98921	011-6808	6	J0635
	TERMINAL, PRESS: .350 L	98921	004-1007	1	E0333
	TERMINAL, PRESS: .515 L	98921	001-1007	8	E0335
	SHIELD, BOTTOM INPUT AMPLIFIER	06811	037460-1-1	1	037460-1-1
	SPACER, BUSH: Teflon, press fit P.C. to chassis	98921	228003	2	H2023
	TERMINAL: Swage bifurcated	88245	2000B	2	E0100

REPLACEABLE PARTS LIST

Equipment/Assembly Designation: REED SWITCH ASSEMBLY (LOW VOLTAGE) #037462-4-1

(1) Reference Designation		(2) Name of Component and Description	(3) Mfr's Code	(4) Manufacturer's Part Number	(5) No. Times Used	(6) Remarks/ SD Stock No.
ITEM	REF					
3		COIL, REED: 32 Vdcw	71707	U-32-P	1	21103130
5		SWITCH, REED: 28 Vdcw	12617	MRMF-235 at 15%	1	05036220
7		COUPLER, THERMAL	06811	037156	1	037156
9		CASE, LOW THERMAL RELAY	06811	037461-6-1	1	037461-6-1

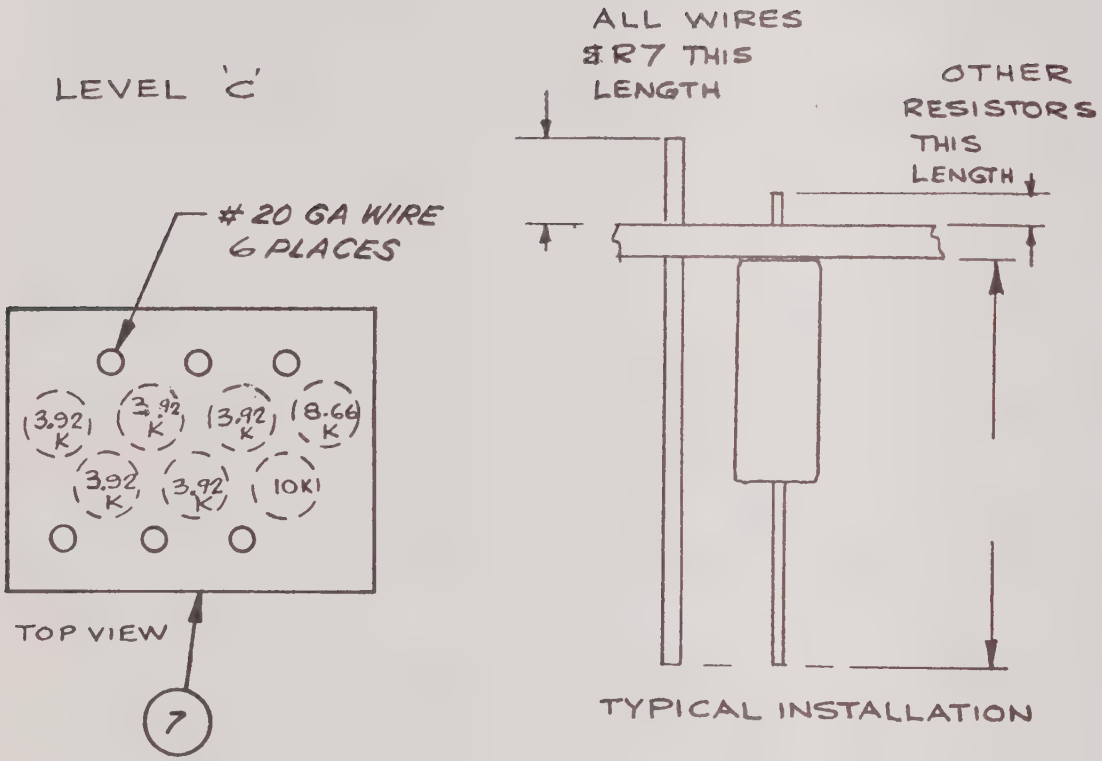

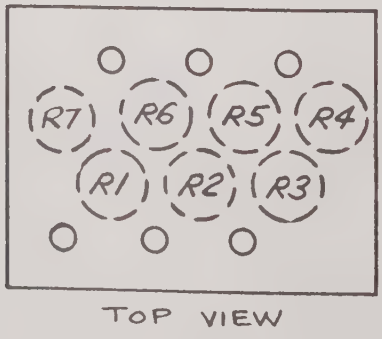

A3, RESISTOR NETWORK ASSEMBLY #037182-4-1 REV A

REPLACEABLE PARTS LIST

Equipment/Assembly Designation: RESISTOR NETWORK ASSEMBLY #037182-4-1

(1) Reference Designation		(2) Name of Component and Description	(3) Mfr's Code	(4) Manufacturer's Part Number	(5) No. Times Used	(6) Remarks/ SD Stock No.
ITEM	REF					
7		P.C. BOARD, RESISTOR NETWORK ASSEMBLY	06811	037179-1-1		037179-1-1
10	R1	RESISTOR, COMP: 10 kΩ ±1%, .1 W, 50 PPM	91637	MF 1/10 T2	1	R1479
11	R2	RESISTOR, COMP: 3.92 kΩ ±1%, .1 W, 100 PPM	91637	MF 1/10 T1	5	02373530
12	R3	RESISTOR, COMP: 3.92 kΩ ±1%, .1 W, 100 PPM	91637	MF 1/10 T1	5	02373530
13	R4	RESISTOR, COMP: 3.92 kΩ ±1%, .1 W, 100 PPM	91637	MF 1/10 T1	5	02373530
14	R5	RESISTOR, COMP: 3.92 kΩ ±1%, .1 W, 100 PPM	91637	MF 1/10 T1	5	02373530
15	R6	RESISTOR, COMP: 3.92 kΩ ±1%, .1 W, 100 PPM	91637	MF 1/10 T1	5	02373530
16	R7	RESISTOR, COMP: 8.66 kΩ ±1%, .12 W, 25 PPM	19701	MF5C-E-8661 F	1	R2583

CIRCUIT DESCRIPTION
A4, INTEGRATOR AND ZERO DETECTOR
SCHEMATIC #7-03762901

The A4 assembly performs the following functions: switching the unknown and reference currents, integrating the reference currents with respect to time, and comparing the output of the integrator at various times during the cycle with its output at the beginning of a measurement cycle. The signal inputs to this assembly are: the current proportional to the unknown voltage, named I_x, the positive and negative reference voltages, and the negative true control signals named $\overline{\int}$, $\int(+E_r)$, $\int(-E_r)$, $\int E_x$, $\overline{\int E_x}$. There is one output signal, from the zero detector, which is connected to the A-D Control Logic.

A4Q1 is on when terminal J, $\overline{\int E_x}$, is low and the unknown current, I_x, is shunted to ground. A4Q3 is on when terminal H, $\int E_x$, is low and the input unknown current is conducted to the input of the integrator. A4Q14 is on when terminal 2&B, $\int -E_r$, is low and conducts current from the integrator to the negative reference supply. A4Q15 is on when terminal 1&A, $\int +E_r$, is low and conducts current into the integrator from the positive reference supply. The combination A4 (R9 + R8 + R7) determines the magnitude of the reference current. A4Q8 is on when terminal F, $\overline{\int}$ is low and clamps integrator A4U1 to make the output voltage equal to the input voltage (nearly zero), and to set the initial conditions for the integration function to follow. This clamp is on from the end of one measurement cycle to the beginning of the next cycle.

Integration of the unknown starts when $\overline{\int}$ goes to the false state, high. The clamp on the integrator is turned off and A4C8 is charged by the unknown current with pin 6 of A4U1 going either positive or negative in response to this current. A positive signal out of the integrator and into the comparator A4U2 will result in a high output at terminal 9 to drive the following logic.

A fraction of the reference voltage is coupled into the reference side of the comparator through A4R15, A4R25, and A4R24. This voltage is adjustable to set the zero of the circuit. A4C3 serves as a means to adjust the symmetry of the threshold and is set to a condition that results in equal readings when small input signals, about 10 digits in value, are applied.

A4VR1 and A4VR2 are used to derive power supply voltages for the operational amplifier and the comparator. The INT. ZERO adjustment is made with a short on the input by measuring the output of the integrator with a voltmeter, and adjusting the control to obtain less than 20 μV when the instrument is in the HOLD mode. DET ZERO is adjusted for a flashing + or - sign with a short on the input and the range set to 10 volts.

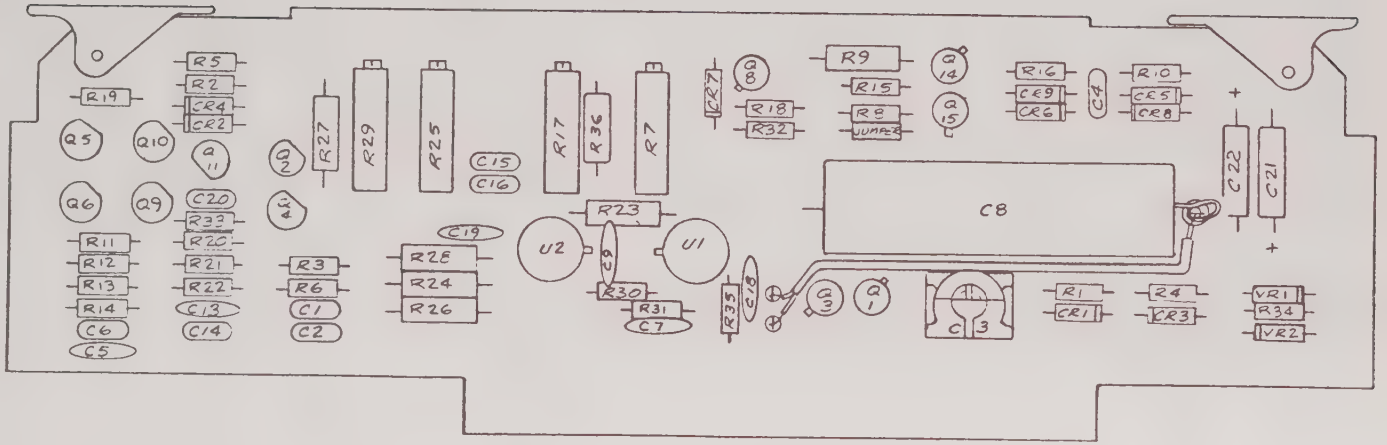

A4, INTEGRATOR AND ZERO DETECTOR ASSEMBLY #03762901 REV C

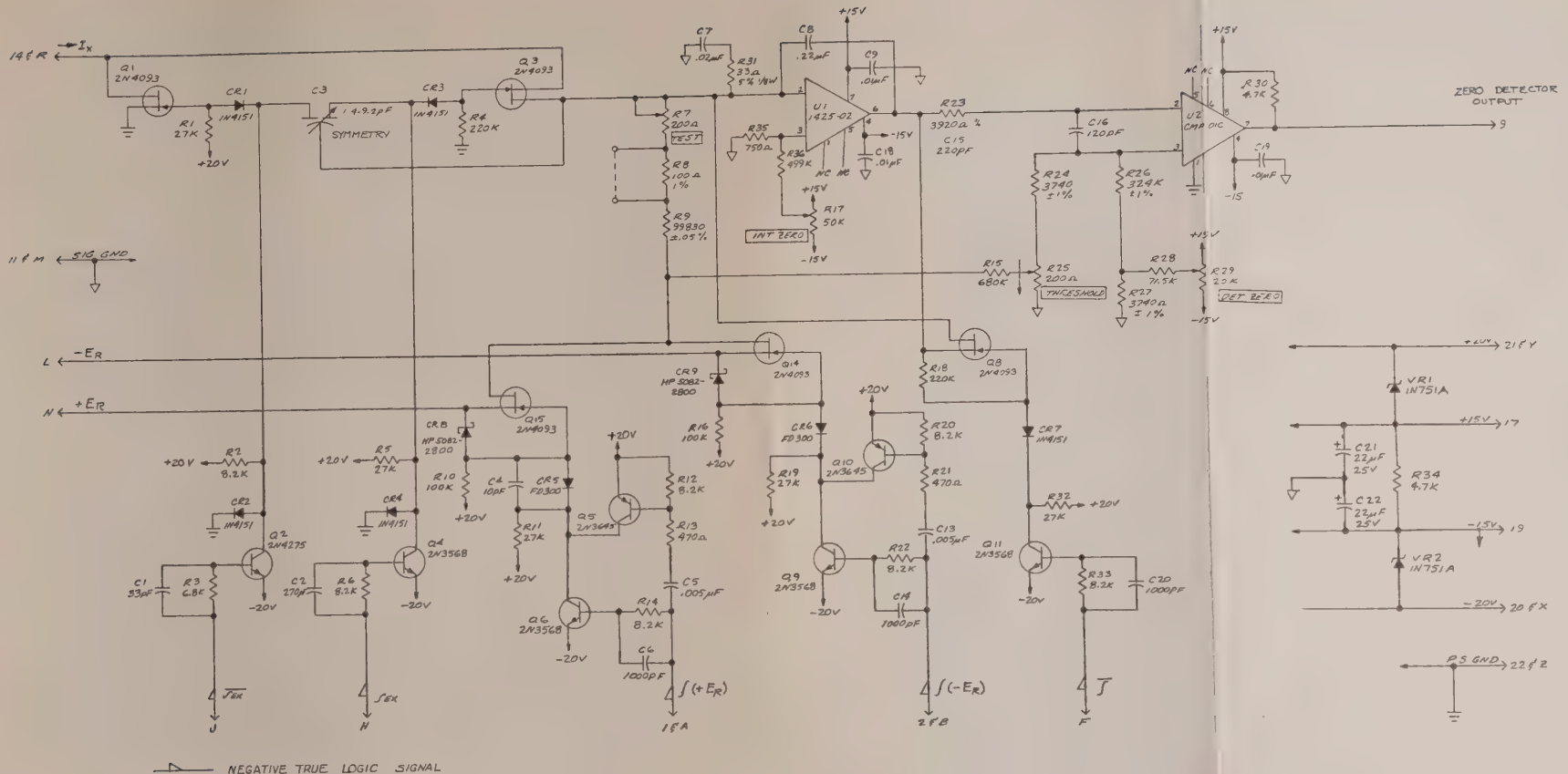

A4, INTEGRATOR AND ZERO DETECTOR
SCHEMATIC #7-03762901 REV C

REPLACEABLE PARTS LIST

Equipment/Assembly Designation: A4, INTEGRATOR & ZERO DETECTOR #0376290

(1) Reference Designation	(2) Name of Component and Description	(3) Mfr's Code	(4) Manufacturer's Part Number	(5) No. Times Used	(6) Remarks/ SD Stock No.
	P.C. BOARD, INTEGRATOR & ZERO DETECTOR	06811	037629	1	037629
A4C1	CAPACITOR, MICA: 33 pF ±5%, 500 Vdcw	72136	DM15ED330J0	1	C0877
A4C2	CAPACITOR, MICA: 270 pF ±5%, 500 Vdcw, Crimp lead	72136	DM15FD271J0	1	C0539
A4C3	CAPACITOR, VARIABLE: 1.4-9.2 pF, Vertical adjust P.C. mt.	74970	189-753-5	1	C1331
A4C4	CAPACITOR, MICA: 10 pF ±5%, 500 Vdcw, Crimp lead	72136	DM15CD100J0	1	C0527
A4C5	CAPACITOR, CERAMIC: .005 µF +60-40%, 150 Vdcw	71590	DDM502	2	C0325
A4C6	CAPACITOR, MICA: 1000 pF ±5%, 100 Vdcw, Crimp lead	72136	DM15FA102J0	4	C0543
A4C7	CAPACITOR, CERAMIC: .02 µF +60-40%, 150 Vdcw	71590	DDM203	1	C0322
A4C8	CAPACITOR, TEFLON: .22 µF ±5%, 100 Vdcw	12517	1TU224JS W/SLV	1	C1257
A4C9	CAPACITOR, CERAMIC: .01 µF +80-20%, 50 Vdcw	56289	TGS10	4	C0562
A4C10	Not used				
A4C11	Not used				
A4C12	Not used				

REPLACEABLE PARTS LIST

Equipment/Assembly Designation: A4, INTEGRATOR & ZERO DETECTOR #03762901 (Cont'd)

(1) Reference Designation	(2) Name of Component and Description	(3) Mfr's Code	(4) Manufacturer's Part Number	(5) No. Times Used	(6) Remarks/ SD Stock No.
A4C13	CAPACITOR, CERAMIC: .005 µF +60-40%, 150 Vdcw	71590	DDM502	2	C0325
A4C14	CAPACITOR, MICA: 1000 pF ±5%, 100 Vdcw, Crimp lead	72136	DM15FA102J0	4	C0543
A4C15	CAPACITOR, MICA: 220 pF ±5%, 500 Vdcw, Crimp lead	72136	DM15FD221J0	1	C0538
A4C16	CAPACITOR, MICA: 120 pF ±5%, 500 Vdcw, Crimp lead	72136	DM15FD121J0	1	C1081
A4C17	Not used				
A4C18	CAPACITOR, CERAMIC: .01 µF +80-20%, 50 Vdcw	56289	TGS10	4	C0562
A4C19	CAPACITOR, CERAMIC: .01 µF +80-20%, 50 Vdcw	56289	TGS10	4	C0562
A4C20	CAPACITOR, MICA: 1000 pF ±5%, 100 Vdcw, Crimp lead	72136	DM15FA102J0	4	C0543
A4C21	CAPACITOR, TANT: 22 µF ±20%, 25 Vdcw	31433	T140B226M025AS	2	C0371
A4C22	CAPACITOR, TANT: 22 µF ±20%, 25 Vdcw	31433	T140B226M025AS	2	C0371
A4CR1	SEMICONDUCTOR DEVICE, DIODE: silicon, 50 Vdcw	03508	1N4151	5	CR0150
A4CR2	SEMICONDUCTOR DEVICE, DIODE: silicon, 50 Vdcw	03508	1N4151	5	CR0150

REPLACEABLE PARTS LIST

Equipment/Assembly Designation A4, INTEGRATOR & ZERO DETECTOR #03762901 (Cont'd)

(1) Reference Designation	(2) Name of Component and Description	(3) Mfr's Code	(4) Manufacturer's Part Number	(5) No. Times Used	(6) Remarks/ SD Stock No.
A4CR3	SEMICONDUCTOR DEVICE, DIODE: silicon, 50 Vdcw	03508	1N4151	5	CR0150
A4CR4	SEMICONDUCTOR DEVICE, DIODE: silicon, 50 Vdcw	03508	1N4151	5	CR0150
A4CR5	SEMICONDUCTOR DEVICE, DIODE: silicon, 125 Vdcw, high conduction	13715	FD300	2	26012320
A4CR6	SEMICONDUCTOR DEVICE, DIODE: silicon, 125 Vdcw, high conduction	13715	FD300	2	26012320
A4CR7	SEMICONDUCTOR DEVICE, DIODE: silicon, 50 Vdcw	03508	1N4151	5	CR0150
A4CR8	SEMICONDUCTOR DEVICE, DIODE: silicon, 70 Vdcw, 100 ps, ultra-fast switch	28480	5082-2800	2	CR0363
A4CR9	SEMICONDUCTOR DEVICE, DIODE: silicon, 70 Vdcw, 100 ps, ultra-fast switch	28480	5082-2800	2	CR0363
A4Q1	SEMICONDUCTOR DEVICE, TRANSISTOR: J FET, N Channel junction	04713	2N4093	5	Q0301
A4Q2	SEMICONDUCTOR DEVICE, TRANSISTOR: Silicon, NPN	07263	2N4275	1	26013140
A4Q3	SEMICONDUCTOR DEVICE, TRANSISTOR: J FET, N Channel junction	04713	2N4093	5	Q0301
A4Q4	SEMICONDUCTOR DEVICE, TRANSISTOR: Silicon, NPN	07263	2N3568	4	Q0180

REPLACEABLE PARTS LIST

Equipment/Assembly Designation: A4, INTEGRATOR & ZERO DETECTOR #03762901 (Cont'd)

(1) Reference Designation	(2) Name of Component and Description	(3) Mfr's Code	(4) Manufacturer's Part Number	(5) No. Times Used	(6) Remarks/ SD Stock No.
A4Q5	SEMICONDUCTOR DEVICE, TRANSISTOR: Silicon, PNP	07263	2N3645	2	Q0215
A4Q6	SEMICONDUCTOR DEVICE, TRANSISTOR: Silicon, NPN	07263	2N3568	4	Q0180
A4Q7	Not used				
A4Q8	SEMICONDUCTOR DEVICE, TRANSISTOR: J FET, N Channel junction	04713	2N4093	5	Q0301
A4Q9	SEMICONDUCTOR DEVICE, TRANSISTOR: Silicon, NPN	07263	2N3568	4	Q0180
A4Q10	SEMICONDUCTOR DEVICE, TRANSISTOR: Silicon, PNP	07263	2N3645	2	Q0215
A4Q11	SEMICONDUCTOR DEVICE, TRANSISTOR: Silicon, NPN	07263	2N3568	4	Q0180
A4Q12	Not used				
A4Q13	Not used				
A4Q14	SEMICONDUCTOR DEVICE, TRANSISTOR: J FET, N Channel junction	04713	2N4093	5	Q0301
A4Q15	SEMICONDUCTOR DEVICE, TRANSISTOR: J FET, N Channel junction	04713	2N4093	5	Q0301
A4R1	RESISTOR, COMP: 27 kΩ ±5%, 1/4 W	01121	CB2735	5	R0824
A4R2	RESISTOR, COMP: 8.2 kΩ ±5%, 1/4 W	01121	CB8225	7	R0883

REPLACEABLE PARTS LIST

Equipment/Assembly Designation A4, INTEGRATOR & ZERO DETECTOR #03762901 (Cont'd)

(1) Reference Designation	(2) Name of Component and Description	(3) Mfr's Code	(4) Manufacturer's Part Number	(5) No. Times Used	(6) Remarks/ SD Stock No.
A4R3	RESISTOR, COMP: 6.8 kΩ ±5%, 1/4 W	01121	CB6825	1	R0696
A4R4	RESISTOR, COMP: 220 kΩ ±5%, 1/4 W	01121	CB2245	2	R0967
A4R5	RESISTOR, COMP: 27 kΩ ±5%, 1/4 W	01121	CB2735	5	R0824
A4R6	RESISTOR, COMP: 8.2 kΩ ±5%, 1/4 W	01121	CB8225	7	R0883
A4R7	RESISTOR, POTENTIOMETER, CERAMIC: 200 Ω ±10%, 3/4 W, 25-turn, P.C. mt., end adjust	73138	89PR200	2	R2722
A4R8	RESISTOR, METAL FILM: 100 Ω ±1%, 1/4 W, 100 PPM	91637	MFF 1/8 T1	1	R2651
A4R9	RESISTOR, METAL FILM: 99.830 kΩ ±.05%, 1/8 W, 5 PPM	75042	AR6	1	R2930
A4R10	RESISTOR, COMP: 100 kΩ ±5%, 1/4 W	01121	CB1045	2	R0741
A4R11	RESISTOR, COMP: 27 kΩ ±5%, 1/4 W	01121	CB2735	5	R0824
A4R12	RESISTOR, COMP: 8.2 kΩ ±5%, 1/4 W	01121	CB8225	7	R0883
A4R13	RESISTOR, COMP: 470 Ω ±5%, 1/4 W	01121	CB4715	2	R1044
A4R14	RESISTOR, COMP: 8.2 kΩ ±5%, 1/4 W	01121	CB8225	7	R0883
A4R15	RESISTOR, COMP: 680 kΩ ±5%, 1/4 W	01121	CB6845	1	R1274

REPLACEABLE PARTS LIST

Equipment/Assembly Designation A4, INTEGRATOR & ZERO DETECTOR #03762901 (Cont'd)

(1) Reference Designation	(2) Name of Component and Description	(3) Mfr's Code	(4) Manufacturer's Part Number	(5) No. Times Used	(6) Remarks/ SD Stock No.
A4R16	RESISTOR, COMP: 100 kΩ ±5%, 1/4 W	01121	CB1045	2	R0741
A4R17	RESISTOR, POTENTIOMETER, CERAMIC: 50 kΩ ±10%, 3/8 W, 15-turn, P.C. mt., end adjust	73138	89PR50K	1	R2783
A4R18	RESISTOR, COMP: 220 kΩ ±5%, 1/4 W	01121	CB2245	2	R0967
A4R19	RESISTOR, COMP: 27 kΩ ±5%, 1/4 W	01121	CB2735	5	R0824
A4R20	RESISTOR, COMP: 8.2 kΩ ±5%, 1/4 W	01121	CB8225	7	R0883
A4R21	RESISTOR, COMP: 470 Ω ±5%, 1/4 W	01121	CB4715	2	R1044
A4R22	RESISTOR, COMP: 8.2 kΩ ±5%, 1/4 W	01121	CB8225	7	R0883
A4R23	RESISTOR, METAL FILM: 3.92 kΩ ±1%, 1/10 W, 100 PPM	91637	MF 1/10 T1	1	02373530
A4R24	RESISTOR, METAL FILM: 3.74 kΩ ±1%, 1/8 W, 100 PPM	19701	MF5C-D-3741-F	2	R2824
A4R25	RESISTOR, POTENTIOMETER, CERAMIC: 200 Ω ±10%, 3/4 W, 25-turn, P.C. mt., end adjust	73138	89PR200	2	R2722
A4R26	RESISTOR, METAL FILM: 324 kΩ ±1%, 1/8 W, 100 PPM	19701	MF5C-D-3243-F	1	R2871
A4R27	RESISTOR, METAL FILM: 3.74 kΩ ±1%, 1/8 W, 100 PPM	19701	MF5C-D-3741-F	2	R2824

REPLACEABLE PARTS LIST

Equipment/Assembly Designation A4, INTEGRATOR & ZERO DETECTOR #03762901 (Cont'd)

(1) Reference Designation	(2) Name of Component and Description	(3) Mfr's Code	(4) Manufacturer's Part Number	(5) No. Times Used	(6) Remarks/ SD Stock No.
A4R28	RESISTOR, METAL FILM: 71.5 kΩ ±1%, 1/8 W, 100 PPM	91637	MFF 1/8 T1	1	R2894
A4R29	RESISTOR, POTENTIOMETER, CERAMIC: 20 kΩ ±10%, 3/8 W, 15-turn, P.C. mt., end adjust	73138	89PR20K	1	01111100
A4R30	RESISTOR, COMP: 4.7 kΩ ±5%, 1/4 W	01121	CB4725	2	R0892
A4R31	RESISTOR, COMP: 33 Ω ±5%, 1/8 W	01121	BB3305	1	R1827
A4R32	RESISTOR, COMP: 27 kΩ ±5%, 1/4 W	01121	CB2735	5	R0824
A4R33	RESISTOR, COMP: 8.2 kΩ ±5%, 1/4 W	01121	CB8225	7	R0883
A4R34	RESISTOR, COMP: 4.7 kΩ ±5%, 1/4 W	01121	CB4725	2	R0892
A4R35	RESISTOR, METAL FILM: 750 Ω ±1%, 1/8 W, 100 PPM	91637	MFF 1/8 T1	1	R2898
A4R36	RESISTOR, METAL FILM: 499 kΩ ±1%, 1/8 W, 100 PPM	19701	MF5C-D-4993-F	1	R2372
A4U1	INTEGRATED CIRCUIT: Operational amplifier, FET input	29832	142502	1	045251
A4U2	INTEGRATED CIRCUIT: Comparator	06665	MONOCMP-01CJ	1	045233
A4VR1	SEMICONDUCTOR DEVICE, DIODE, ZENER: 5.1 Vdcw, ±5%, .4 W	03877	1N751A	2	CR0095

REPLACEABLE PARTS LIST

Equipment/Assembly Designation A4. INTEGRATOR & ZERO DETECTOR #03762901 (Cont'd)

(1) Reference Designation	(2) Name of Component and Description	(3) Mfr's Code	(4) Manufacturer's Part Number	(5) No. Times Used	(6) Remarks/ SD Stock No.
A4VR2	SEMICONDUCTOR DEVICE, DIODE, ZENER: 5.1 Vdcw, ±5%, .4 W	03877	1N751A	2	CR0095
	TERMINAL, PRESS: .455 L	71279	4034-3-0519	1	51024460
	EXTRACTOR, P.C., PLAIN	51495	1743	1	H1743
	EXTRACTOR, P.C., HOT STAMP, A4	06811	039842-4	1	039842-4
	TERMINAL: Swage bifurcated	88245	2000B	2	E0100
	PIN, SPRING	73957	50-094-0250	2	H1083

CIRCUIT DESCRIPTION
A5, A-D CONTROL LOGIC
SCHEMATIC #7-03762301

The A5 board in the Model 7110A carries the clock oscillator and the logic gates which are involved in the analog-to-digital conversion. A5Q6, in conjunction with A5VR1 and A5R16, provides a 5 volt supply voltage above the -20 volt supply for these logic elements. Inputs to this board include: the signal from the comparator on terminal 18&V, the Full Scale pulse on terminal J&8, the Complement pulse on terminal F, and the starting signal on terminal 4. Outputs from this board are: gated clock pulses on terminal 3, negative polarity pulse on terminal E, $\overline{\int}$ on terminal 10, $\overline{\int E_x}$ on terminal 12&N, $\int E_x$ on terminal 11&M, $\int +E_r$ on terminal 1&A, and $\int -E_r$ on terminal 2&B. The voltage on the terminal from the zero detector ranges from -.5 to ±3 volts and it is shifted by the action of A5Q5 to the range of -20 to -17. The zero detector signal at the collector of A5Q5 is inverted and amplified by A5Q4 and then by A5Q3 which are capable of sinking the currents from the gates A5U4C and A5U4D.

A5Q2 and associated components comprise the crystal oscillator which operates at 6 MHz in the standard configuration or at 5 MHz in the 50 Hz option. A5Q1 is a buffer to secure logic gate driving capability. The clock signal out of the buffer is inverted by gate element A5U1D and applied to one input of gate A5U1C. The other input of A5U1C is connected to the digital count and control board through a pulse transformer which has a rectangular wave out when the digital section is ready to start a new measurement. When the clock and the start signals are both high, the flip-flop, consisting of A5U1B and A5U3A, will be set and, in turn, will gate on the clock and make $\overline{\int}$ on terminal 10 high.

Integration of the unknown voltage now proceeds until 10^5 counts are accumulated and the Full Scale pulse sets the Full Scale flip-flop consisting of A5U2B and A5U2C. During this period the polarity flip-flop, consisting of A5U4A and A5U4B, has assumed the same state as the output of the zero detector at the end of the $\int E_x$ period. If the input voltage is negative, the output of the zero detector is negative; the collector of A5Q4 is high and that of A5Q3 low; gate A5U4C has both inputs high; polarity flip-flop has A5U4B output high which primes one input of gate A5U3C and the low output of the polarity flip-flop; and the low state on terminal 8 of A5U2C, Full Scale flip-flop, makes 11 of A5U5A high. With 11 of A5U2D, complement flip-flop, high, the output of A5U6C will be high and 6 of A5U6F will be low, thus, connecting the positive reference to the integrator and causing the output of the integrator to become more negative.

After an additional 100 clock pulses, the Complement pulse is generated in the digital count and control circuits and coupled into the A-D Control Logic via the pulse transformer. This pulse

sets the complement flip-flop, which after 3 μs delay, primes both gates A5U3B and A5U3C, which turns gate A5U6C off and A5U6B on, thus disconnecting the positive reference and connecting the negative reference voltage. The negative reference voltage now causes the output of the integrator to become more positive and approach zero volts.

When the output of the integrator goes through zero volts, the collector of A5Q3 will go high, making the three inputs of gate Q5U3C high and its output low. The integrate flip-flop will be reset, gating off the clock and resetting the Full Scale flip-flop after a 20 μs delay, the complement flip-flop, and changing the $\overline{J}$ output to its true condition. The negative-going transient at terminal 8 of A5U3C is also coupled through a transformer to the digital count and control circuits to set the negative polarity flip-flop so that the negative sign can be energized. The case for positive input voltages is similar except that no polarity pulse is generated.

Because false on-scale readings can be indicated if a low voltage is used as the reference input and a voltage greater than twice the reference input is applied to the unknown input terminals, circuitry is incorporated to generate a false zero detection when the integration of reference time exceeds about 22 ms, or 1.3 times full scale. When the full scale flip-flop is set, A5Q7 is turned off and A5C17 is charged through A5R23 until the trigger voltage of A5Q8 is reached and a pulse is generated across A5R26. This pulse turns A5Q9 on for a short time to make terminal 2 of A5U3A low. This is equivalent to a zero detection signal and causes the logic circuitry to continue its cycle as if zero detection had been reached. The reading will be in the range between 130000 and 195000 and the off-scale light and signal output line will be energized. This circuitry allows the digital portion of the instrument to recycle when the Integrator Zero Detector board is removed from the equipment and can be an aid in servicing the digital portion of the apparatus.

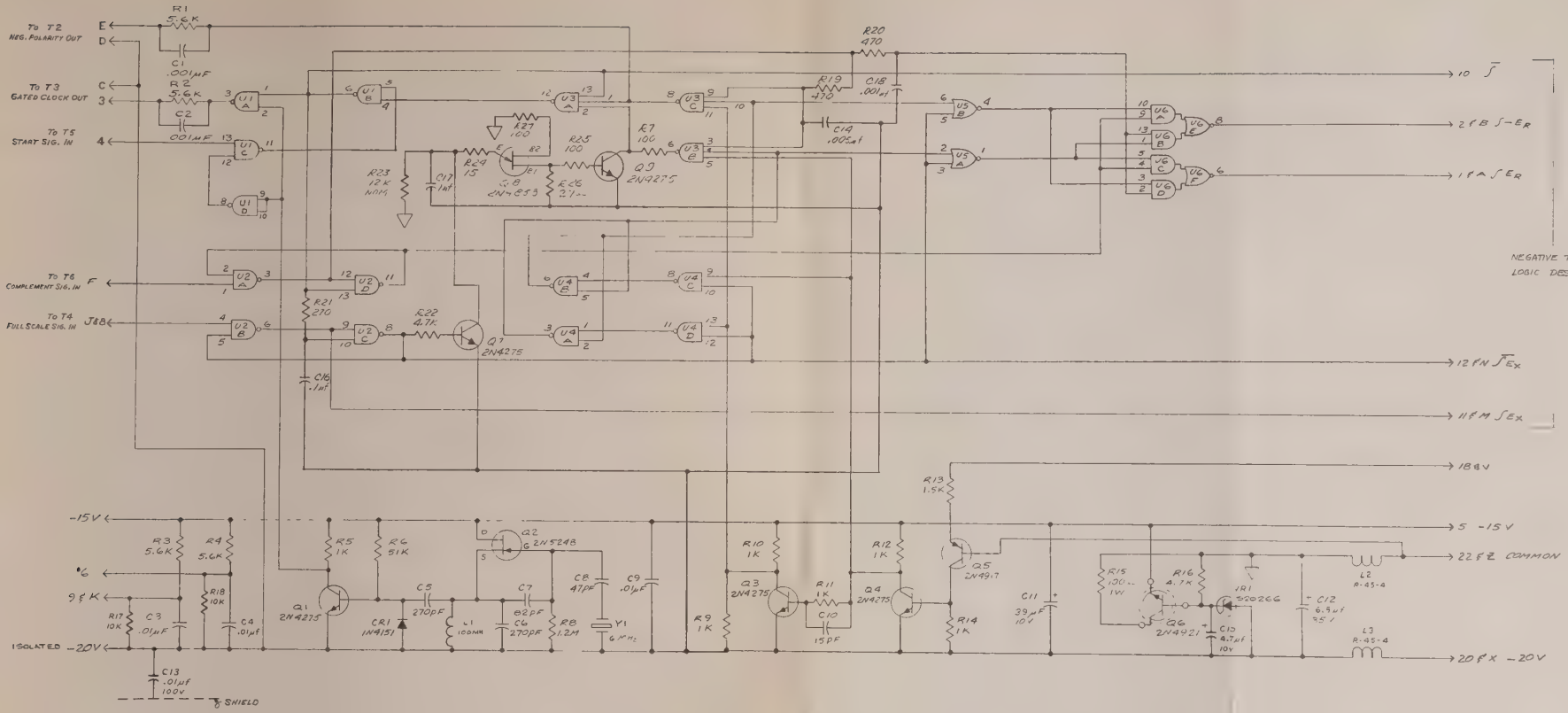

NOTE

1. UNLESS SPECIFIED, RESISTORS ARE ±5%, 1/4W.
2. U1, U2 & U4 ARE SN7400N
   U3 IS SN7410N
   U5 IS SN7402N
   U6 IS SN7451N
   ALL I.C.s: PIN 7 TO −20V
   PIN 14 TO −15V
3. SELECT R_K (R23) TO OBTAIN A DISPLAY BETWEEN 190000 & 190000 WITH >100% OVER RANGE INPUT LEVEL.

A5, A-D CONTROL LOGIC
SCHEMATIC #7-03762301 REV C

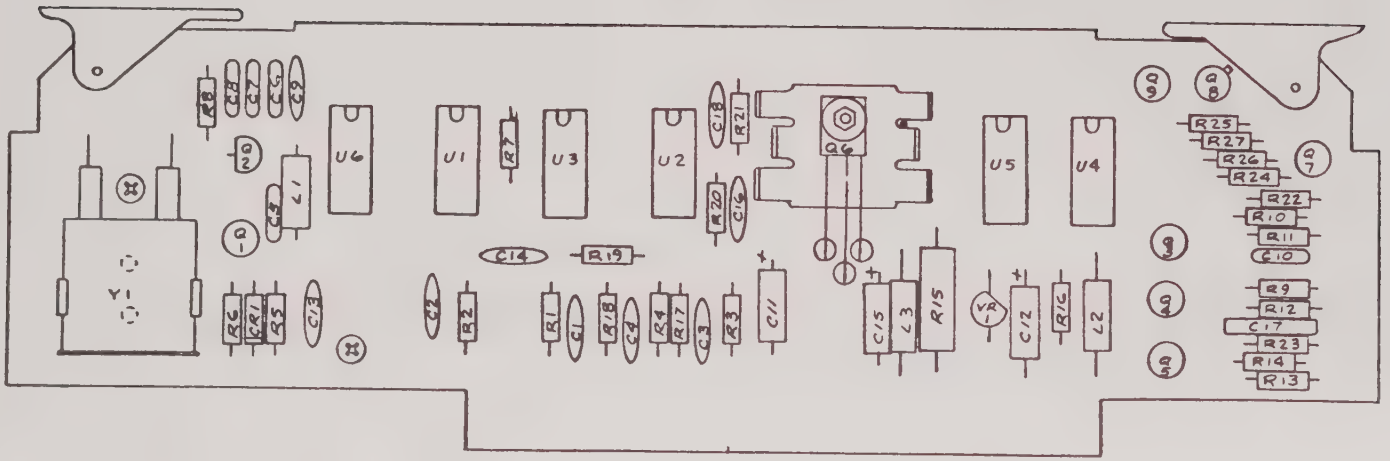

A5, A-D CONTROL LOGIC ASSEMBLY #03762301 REV C

REPLACEABLE PARTS LIST

Equipment/Assembly Designation A5, A-D CONTROL LOGIC #03762301

(1) Reference Designation	(2) Name of Component and Description	(3) Mfr's Code	(4) Manufacturer's Part Number	(5) No. Times Used	(6) Remarks/ SD Stock No.
	P.C. BOARD, A-D CONTROL LOGIC	06811	037623	1	037623
	SHIELD	06811	037161-1-1	1	037161-1-1
A5C1	CAPACITOR, CERAMIC: .001 µF, 1 kV, ±20%, Z5U	91418	TYPE B	3	C0424
A5C2	CAPACITOR, CERAMIC: .001 µF, 1 kV, ±20%, Z5U	91418	TYPE B	3	C0424
A5C3	CAPACITOR, CERAMIC: .01 µF +80-20%, 100 Vdcw	91418	TA110	4	C0556
A5C4	CAPACITOR, CERAMIC: .01 µF +80-20%, 100 Vdcw	91418	TA110	4	C0556
A5C5	CAPACITOR, MICA: 270 pF ±5%, 500 Vdcw, crimp lead	72136	DM15FD271JO	2	C0539
A5C6	CAPACITOR, MICA: 270 pF ±5%, 500 Vdcw, crimp lead	72136	DM15FD271JO	2	C0539
A5C7	CAPACITOR, MICA: 82 pF ±5%, 500 Vdcw, crimp lead	72136	DM15ED820JO	1	C0535
A5C8	CAPACITOR, MICA: 47 pF ±5%, 500 Vdcw, crimp lead	72136	DM15ED470JO	1	C0533
A5C9	CAPACITOR, CERAMIC: .01 µF +80-20%, 100 Vdcw	91418	TA110	4	C0556
A5C10	CAPACITOR, MICA: 15 pF ±5%, 500 Vdcw, crimp lead	72136	DM15CD150JO	1	C0528

REPLACEABLE PARTS LIST

Equipment/Assembly Designation A5, A-D CONTROL LOGIC #03762301 (Cont'd)

(1) Reference Designation	(2) Name of Component and Description	(3) Mfr's Code	(4) Manufacturer's Part Number	(5) No. Times Used	(6) Remarks/ SD Stock No.
A5C11	CAPACITOR, TANT: 39 µF ±10%, 10 Vdcw	56289	150D396X9010B2	1	C0902
A5C12	CAPACITOR, TANT: 6.8 µF ±20%, 35 Vdcw	56289	150D685X9035B2	1	C0899
A5C13	CAPACITOR, CERAMIC: .01 µF +80-20%, 100 Vdcw	91418	TA110	4	C0556
A5C14	CAPACITOR, CERAMIC: .005 µF +60-40%, 150 Vdcw	71590	DDM502	1	C0325
A5C15	CAPACITOR, TANT: 4.7 µF ±10%, 10 Vdcw	56289	150D475X9010A2	1	C1011
A5C16	CAPACITOR, CERAMIC: .1 µF +80-20%, 10 Vdcw	71590	UK10-104	1	C0661
A5C17	CAPACITOR, CERAMIC: 1. µF ±20%, 25 Vdcw	56289	5C023105X0250B3	1	C0879
A5C18	CAPACITOR, CERAMIC: .001 µF, 1 kV, 20%, Z5U	91418	TYPE B	3	C0424
A5CR1	SEMICONDUCTOR DEVICE, DIODE: Silicon, 50 Vdcw	03508	1N4151	1	CR0150
A5VR1	SEMICONDUCTOR DEVICE, DIODE, ZENER: 5.6 Vdcw, ±5%, 10 mA	06811	26003501	1	26003501
A5Q1	SEMICONDUCTOR DEVICE, TRANSISTOR: Silicon, NPN	07263	2N4275	5	26013140
A5Q2	SEMICONDUCTOR DEVICE, TRANSISTOR: J FET, N Channel	01295	2N5248	1	Q0244
A5Q3	SEMICONDUCTOR DEVICE, TRANSISTOR: Silicon, NPN	02763	2N4275	5	26013140

REPLACEABLE PARTS LIST

Equipment/Assembly Designation A5, A-D CONTROL LOGIC #03762301 (Cont'd)

(1) Reference Designation	(2) Name of Component and Description	(3) Mfr's Code	(4) Manufacturer's Part Number	(5) No. Times Used	(6) Remarks/ SD Stock No.
A5Q4	SEMICONDUCTOR DEVICE, TRANSISTOR: Silicon, NPN	07263	2N4275	5	26013140
A5Q5	SEMICONDUCTOR DEVICE, TRANSISTOR: Silicon, PNP	07263	2N4917	1	26014620
A5Q6	SEMICONDUCTOR DEVICE, TRANSISTOR: Silicon, NPN, 30 W	04713	2N4921	1	Q0267
A5Q7	SEMICONDUCTOR DEVICE, TRANSISTOR: Silicon, NPN	07263	2N4275	5	26013140
A5Q8	SEMICONDUCTOR DEVICE, TRANSISTOR: Unijunction	04713	2N4853	1	Q0249
A5Q9	SEMICONDUCTOR DEVICE, TRANSISTOR: Silicon, NPN	07263	2N4275	5	26013140
A5R1	RESISTOR, COMP: 5.6 kΩ ±5%, 1/4 W	01121	CB5625	4	R0821
A5R2	RESISTOR, COMP: 5.6 kΩ ±5%, 1/4 W	01121	CB5625	4	R0821
A5R3	RESISTOR, COMP: 5.6 kΩ ±5%, 1/4 W	01121	CB5625	4	R0821
A5R4	RESISTOR, COMP: 5.6 kΩ ±5%, 1/4 W	01121	CB5625	4	R0821
A5R5	RESISTOR, COMP: 1 kΩ ±5%, 1/4 W	01121	CB1025	6	R0765
A5R6	RESISTOR, COMP: 51 kΩ ±5%, 1/4 W	01121	CB5135	1	R0842
A5R7	RESISTOR, COMP: 100 Ω ±5%, 1/4 W	01121	CB1015	3	R0966

REPLACEABLE PARTS LIST

Equipment/Assembly Designation A5, A-D CONTROL LOGIC #03762301 (Cont'd)

(1) Reference Designation	(2) Name of Component and Description	(3) Mfr's Code	(4) Manufacturer's Part Number	(5) No. Times Used	(6) Remarks/ SD Stock No.
A5R8	RESISTOR, COMP: 1.2 MΩ ±5%, 1/4 W	01121	CB1255	1	R1299
A5R9	RESISTOR, COMP: 1 kΩ ±5%, 1/4 W	01121	CB1025	6	R0765
A5R10	RESISTOR, COMP: 1 kΩ ±5%, 1/4 W	01121	CB1025	6	R0765
A5R11	RESISTOR, COMP: 1 kΩ ±5%, 1/4 W	01121	CB1025	6	R0765
A5R12	RESISTOR, COMP: 1 kΩ ±5%, 1/4 W	01121	CB1025	6	R0756
A5R13	RESISTOR, COMP: 1.5 kΩ ±5%, 1/4 W	01121	CB1525	1	R0783
A5R14	RESISTOR, COMP: 1 kΩ ±5%, 1/4 W	01121	CB1025	6	R0765
A5R15	RESISTOR, COMP: 100 Ω ±5%, 1 W	01121	GB1015	1	R2177
A5R16	RESISTOR, COMP: 4.7 kΩ ±5%, 1/4 W	01121	CB4725	2	R0892
A5R17	RESISTOR, COMP: 10 kΩ ±5%, 1/4 W	01121	CB1035	2	R0766
A5R18	RESISTOR, COMP: 10 kΩ ±5%, 1/4 W	01121	CB1035	2	R0766
A5R19	RESISTOR, COMP: 470 Ω ±5%, 1/4 W	01121	CB4715	2	R1044
A5R20	RESISTOR, COMP: 470 Ω ±5%, 1/4 W	01121	CB4715	2	R1044

REPLACEABLE PARTS LIST

Equipment/Assembly Designation: A5, A-D CONTROL LOGIC #03762301 (Cont'd)

(1) Reference Designation	(2) Name of Component and Description	(3) Mfr's Code	(4) Manufacturer's Part Number	(5) No. Times Used	(6) Remarks/ SD Stock No.
A5R21	RESISTOR, COMP: 270 Ω ±5%, 1/4 W	01121	CB2715	1	R0694
A5R22	RESISTOR, COMP: 4.7 kΩ ±5%, 1/4 W	01121	CB4725	2	R0892
A5R23	RESISTOR, COMP: 12 kΩ ±5%, 1/4 W	01121	CB1235	1	R0759
A5R24	RESISTOR, COMP: 15 Ω ±5%, 1/4 W	01121	CB1505	1	R1607
A5R25	RESISTOR, COMP: 100 Ω ±5%, 1/4 W	01121	CB1015	3	R0966
A5R26	RESISTOR, COMP: 27 Ω ±5%, 1/4 W	01121	CB2705	1	R1548
A5R27	RESISTOR, COMP: 100 Ω ±5%, 1/4 W	01121	CB1015	3	R0966
A5U1	INTEGRATED CIRCUIT: Quad 2-input NAND gate, TTL	01295	SN7400N	3	019705
A5U2	INTEGRATED CIRCUIT: Quad 2-input NAND gates, TTL	01295	SN7400N	3	019705
A5U3	INTEGRATED CIRCUIT: Triple 3-input NAND gate, TTL	01295	SN7410N	1	019706
A5U4	INTEGRATED CIRCUIT: Quad 2-input NAND gate, TTL	01295	SN7400N	3	019705
A5U5	INTEGRATED CIRCUIT: Quad 2-input NOR gate, TTL	01295	SN7402N	1	025709
A5U6	INTEGRATED CIRCUIT: Dual 2-wide, AND/OR inverter, TTL	01295	SN7451N	1	025707

REPLACEABLE PARTS LIST

Equipment/Assembly Designation A5, A-D CONTROL LOGIC #03762301 (Cont'd)

(1) Reference Designation	(2) Name of Component and Description	(3) Mfr's Code	(4) Manufacturer's Part Number	(5) No. Times Used	(6) Remarks/ SD Stock No.
A5Y1	CRYSTAL: 6.000 MHz, .005% Par. 32 pF series	00809	A061FFG32	1	Y0051
A5XY1	SOCKET, CRYSTAL: P.C. mt., with holder	91506	8000-DG2	1	H1190
A5L1	CHOKE: 100 µH, 5%, 30 Q min.	72259	WEE-100	1	L0073
A5L2	CHOKE: Fixed Ferrite bead construction	42498	R-45-4	2	L0143
A5L3	CHOKE: Fixed Ferrite bead construction	42498	R-45-4	2	L0143
	HEAT SINK	98978	PAZ-1CB	1	H1956
	EXTRACTOR, P.C., PLAIN	51495	1743	1	H1743
	EXTRACTOR, P.C., HOT STAMP, A5	06811	039842-5	1	039842-5
	CONNECTOR, P.C. PIN: Single male post, 10/inch	00779	86090-4	1	E0322
	TERMINAL: Swage bifurcated	88245	2000B	3	E0100
	PIN, SPRING	73957	50-094-0250	2	H1083
	SCREW, PAN HEAD MACHINE: 4-40 X 1/4	MIL	MS51957-13	2	H0440
	SCREW, PAN HEAD MACHINE: 4-40 X 3/8	MIL	MS51957-15	1	H0376
	WASHER: #4, split-lock	MIL	MS35338-135	2	H0782
	EYELET: 1/8	04264	CE-63F	2	E0088
	NUT: Hex 4-40 speed	MIL	NAS671C4	1	H0249
	POST, RECEPTACLE	00779	86090-4	1	E0322

CIRCUIT DESCRIPTION
A6, REFERENCE AND POWER SUPPLY
SCHEMATIC #7-03755101

The A6 board in the guarded section contains the regulator section for the main power supply, input buffer amplifiers for the external reference, and the internal reference supply. A6U6 is a μA 723 type of monolithic integrated circuit in the typical positive regulator configuration set to drive the pass transistor mounted on the rear wall of the guard. Shorts are provided across A6R28 and A6R29 which can be removed to increase the output voltage of the supply. Removing the short across A6R29 raises the voltage about 2.9%, from across A6R28 raises the voltage by 5.8%, and from across both resistors raises the voltage by 8.4%. The adjustment which comes closest to 20 volts is the desired adjustment, and about 1.5% deviation is tolerable.

The negative supply regulator employs A6U7 (μA 723) in the negative regulator configuration with Q1 on the rear guard wall as the pass transistor for the load current. Shorts around A6R33 and A6R34 can be removed to give a 3%, 6.4%, or 9.4% increase in the output voltage, and the negative output should be adjusted to within about 2% of -20 volts.

The internal reference supply for the 7110A on this board involves A6VR1 and A6U4 along with associated resistors. A6VR1 is a 6.2 volt Zener diode which has been selected for low-temperature coefficient and for low-voltage drift with time. A6U4 is a high-gain operational amplifier in a gain-adjustable circuit adjusted to amplify the voltage across A6VR1 by about 1.6 to give an output of 10 volts. Since the output is at a well-regulated voltage, the resistance network supplying the bias current in A6VR1 is connected to this point to achieve a relatively constant bias current to the diode. A6R11 allows for a small adjustment in the magnitude of the bias current and can be set to a value which will result in a very-low temperature coefficient for the total supply. Shorts around resistors in the string A6R15 through A6R20 are installed to give close to 10 volts as possible with A6R14 at mid-position.

A6U1, U2, and U3 are connected in a gain-of-1 configuration with means for adjusting the dc common mode signal rejection to a high value, with means for adjusting the gain around 1, with means (A6R9) for adjusting the zero input offset, and with a very high input impedance so that reference voltage sources will not be loaded significantly if their internal impedances are low. The differential input impedance is about 2 MΩ and the line to signal common impedance is 1 MΩ. A6U1 and A6U2 are connected as unity gain voltage followers and then by resistance attenuator networks to A6U3. The GAIN and CMR adjustments are made by a series of steps during calibration.

A6U5 and associated resistors function as the inverter of either the internal or external signal. A6R25 is adjusted to reduce the offset of A6U5 to zero. The two RATIO ZERO adjustments are more critical for the lower values of external reference voltage. The -REF adjustment is made to set the inverter gain at the time the -10 volt sensitivity is being checked.

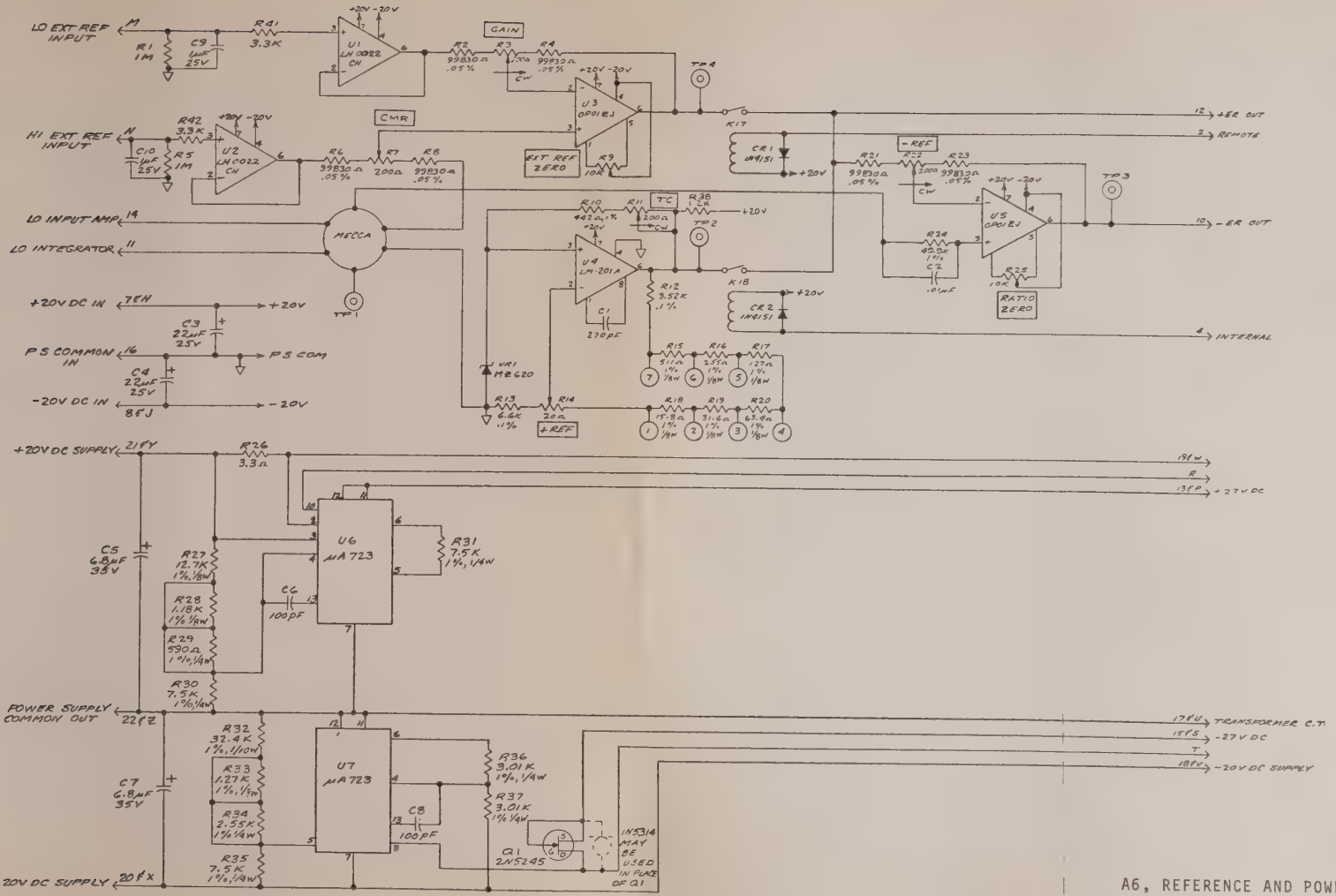

A6, REFERENCE AND POWER SUPPLY
SCHEMATIC #7-03755101 REV D

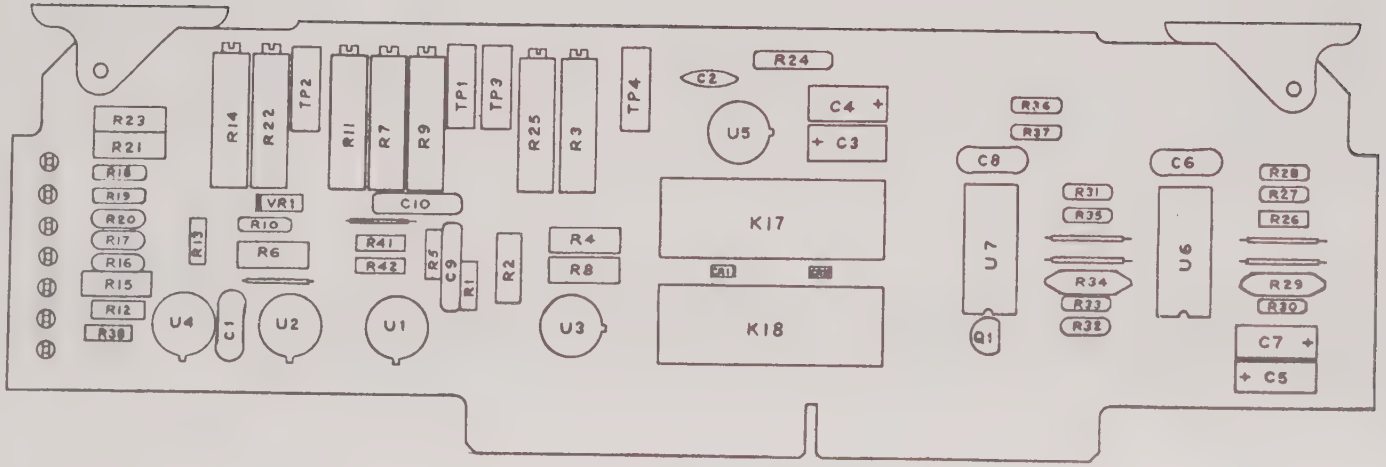

A6, REFERENCE AND POWER SUPPLY ASSEMBLY #03755101 REV D

REPLACEABLE PARTS LIST

Equipment/Assembly Designation A6, REFERENCE AND POWER SUPPLY #03755101

(1) Reference Designation	(2) Name of Component and Description	(3) Mfr's Code	(4) Manufacturer's Part Number	(5) No. Times Used	(6) Remarks/ SD Stock No.
	P.C. BOARD, REFERENCE AND POWER SUPPLY	06811	037551	1	037551
A6C1	CAPACITOR, MICA: 270 pF ±5%, 500 Vdcw, crimp lead	72136	DM15FD271JO	1	C0539
A6C2	CAPACITOR, CERAMIC: .01 µF +80-20%, 100 Vdcw	91418	TA110	1	C0556
A6C3	CAPACITOR, TANT: 22 µF ±20%, 25 Vdcw	31433	T140B226M025AS	2	C0371
A6C4	CAPACITOR, TANT: 22 µF ±20%, 25 Vdcw	31433	T140B226MO25AS	2	C0371
A6C5	CAPACITOR, TANT: 6.8 µF ±20%, 35 Vdcw	56289	150D685X9035B2	2	C0899
A6C6	CAPACITOR, MICA: 100 pF ±5%, 500 Vdcw	72136	DM15ED820JO	2	C0874
A6C7	CAPACITOR, TANT: 6.8 µF ±20%, 35 Vdcw	56289	150D685X9035B2	2	C0899
A6C8	CAPACITOR, MICA: 100 pF ±5%, 500 Vdcw	72136	DM15ED820JO	2	C0874
A6C9	CAPACITOR, CERAMIC: 1. µF ±20%, 25 Vdcw	56289	5C023105X0250B3	2	C0879
A6C10	CAPACITOR, CERAMIC: 1. µF ±20%, 25 Vdcw	56289	5C023105X0250B3	2	C0879
A6CR1	SEMICONDUCTOR DEVICE, DIODE: Silicon, 50 Vdcw	03508	1N4151	2	CR0150
A6CR2	SEMICONDUCTOR DEVICE, DIODE: Silicon, 50 Vdcw	03508	1N4151	2	CR0150

REPLACEABLE PARTS LIST

Equipment/Assembly Designation: A6, REFERENCE AND POWER SUPPLY #03755101 (Cont'd)

(1) Reference Designation	(2) Name of Component and Description	(3) Mfr's Code	(4) Manufacturer's Part Number	(5) No. Times Used	(6) Remarks/ SD Stock No.
A6K17	Switch: Reed assembly, low voltage	06811	037462-4-1	2	037462-4-1
A6K18	Switch: Reed assembly, low voltage	06811	037462-4-1	2	037462-4-1
A6Q1	SEMICONDUCTOR DEVICE TRANSISTOR	06811	Q0276	1	Q0276
A6R1	RESISTOR, COMP: 1 MΩ ±5%, 1/4 W	01121	CB1055	2	R0962
A6R2	RESISTOR, METAL FILM: 99830 Ω ±.05%, .12 W, 5 PPM	75042	AR6	6	R2930
A6R3	RESISTOR, POTENTIOMETER, CERAMIC: 200 Ω ±10%, 3/8 W, 15-turn, P.C. mt., end adjust	73138	89PR200	4	R2722
A6R4	RESISTOR, METAL FILM: 99830 Ω ±.05%, .12 W, 5 PPM	75042	AR6	6	R2930
A6R5	RESISTOR, COMP: 1 MΩ ±5%, 1/4 W	01121	CB1055	2	R0962
A6R6	RESISTOR, METAL FILM: 99830 Ω ±.05%, .12 W, 5 PPM	75042	AR6	6	R2930
A6R7	RESISTOR, POTENTIOMETER, CERAMIC: 200 Ω ±10%, 3/8 W, 15-turn, P.C. mt., end adjust	73138	89PR200	4	R2722
A6R8	RESISTOR, METAL FILM: 99830 Ω ±.05%, .12 W, 5 PPM	75042	AR6	6	R2930
A6R9	RESISTOR, POTENTIOMETER, CERAMIC: 10 kΩ ±10%, 3/8 W, 15-turn, P.C. mt., end adjust	73138	89PR10K	2	011111320

REPLACEABLE PARTS LIST

Equipment/Assembly Designation A6. REFERENCE AND POWER SUPPLY #03755101 (Cont'd)

(1) Reference Designation	(2) Name of Component and Description	(3) Mfr's Code	(4) Manufacturer's Part Number	(5) No. Times Used	(6) Remarks/ SD Stock No.
A6R10	RESISTOR, METAL FILM: 442 Ω ±1%, .12 W, 100 PPM	91637	MFF-1/8 T1	1	R2874
A6R11	RESISTOR, POTENTIOMETER, CERAMIC: 200 Ω ±10%, 3/8 W, 15-turn, P.C. mt., end adjust	73138	89PR200	4	R2722
A6R12	RESISTOR, METAL FILM: 3.5 kΩ ±.1%, .3 W, 1 PPM	18612	S102	1	R2782
A6R13	RESISTOR, METAL FILM: 6.6 kΩ ±.1%, .3 W, 5 PPM	18612	S102	1	02417540
A6R14	RESISTOR, POTENTIOMETER, CERAMIC: 20 Ω ±20%, 3/8 W, 15-turn, P.C. mt., end adjust	73138	89PR20	1	R2784
A6R15	RESISTOR, METAL FILM: 511 Ω ±1%, 1/8 W	06811	02394840	1	02394840
A6R16	RESISTOR, METAL FILM: 255 Ω ±1%, 1/8 W, 100 PPM	19701	MF5C-D-2550F	1	R2743
A6R17	RESISTOR, METAL FILM: 127 Ω ±1%, 1/8 W, 100 PPM	10701	MF5C-D-1270F	1	R2742
A6R18	RESISTOR, METAL FILM: 15.8 Ω ±1%, 1/8 W, 100 PPM	19701	MF5C-D-15R8F	1	R2739
A6R19	RESISTOR, METAL FILM: 31.6 Ω ±1%, 1/8 W, 100 PPM	19701	MF5C-D-31R6F	1	R2740
A6R20	RESISTOR, METAL FILM: 63.4 Ω ±1%, 1/8 W, 100 PPM	19701	MF5C-D-63R4F	1	R2741
A6R21	RESISTOR, METAL FILM: 99830 Ω ±.05%, .12 W, 5 PPM	75042	AR6	6	R2930

REPLACEABLE PARTS LIST

Equipment/Assembly Designation A6, REFERENCE AND POWER SUPPLY #03755101 (Cont'd)

(1) Reference Designation	(2) Name of Component and Description	(3) Mfr's Code	(4) Manufacturer's Part Number	(5) No. Times Used	(6) Remarks/ SD Stock No.
A6R22	RESISTOR, POTENTIOMETER, CERAMIC: 200 Ω ±10%, 3/8 W, 15-turn, P.C. mt., end adjust	73138	89PR200	4	R2722
A6R23	RESISTOR, METAL FILM: 99830 Ω ±.05%, ¦12 W, 5 PPM	75042	AR6	6	R2930
A6R24	RESISTOR, METAL FILM: 49.9 kΩ ±1%, 1/4 W, 100 PPM	91637	MFF 1/4 T1	1	R2844
A6R25	RESISTOR, POTENTIOMETER, CERAMIC: 10 kΩ ±10%, 3/8 W, 15-turn, P.C. mt., end adjust	73138	89PR10K	2	01111320
A6R26	RESISTOR, COMP: 3.3 Ω ±5%, 1/4 W	01121	CB33G5	1	R2496
A6R27	RESISTOR, METAL FILM: 12.7 kΩ ±1%, 1/8 W, 100 PPM	91637	MFF 1/8 T1	1	R2882
A6R28	RESISTOR, METAL FILM: 1.18 kΩ ±1%, 1/8 W, 100 PPM	19701	MF5C-D1181-F	1	R2881
A6R29	RESISTOR, METAL FILM: 590 Ω ±1%, 1/4 W, 25 PPM	06811	R2515	1	R2515
A6R30	RESISTOR, METAL FILM: 7.50 kΩ ±1%, 1/4 W, 25 PPM	91637	MFF 1/8 T9	3	R2513
A6R31	RESISTOR, METAL FILM: 7.50 kΩ ±1%, 1/4 W, 25 PPM	91637	MFF 1/8 T9	3	R2513
A6R32	RESISTOR, COMP: 32.4 kΩ ±1%, 1/10 W	06811	02417750	1	02417750
A6R33	RESISTOR, METAL FILM: 1.27 kΩ ±1%, 1/8 W, 100 PPM	91637	MFF 1/8 T1	1	R2883

REPLACEABLE PARTS LIST

Equipment/Assembly Designation: A6, REFERENCE AND POWER SUPPLY #03755101 (Cont'd)

(1) Reference Designation	(2) Name of Component and Description	(3) Mfr's Code	(4) Manufacturer's Part Number	(5) No. Times Used	(6) Remarks/ SD Stock No.
A6R34	RESISTOR, COMP: 2.55 kΩ ±1%, 1/4 W	06811	R2512	1	R2512
A6R35	RESISTOR, METAL FILM: 7.50 kΩ ±1%, 1/4 W	91637	MFF 1/8 T9	3	R2513
A6R36	RESISTOR, METAL FILM: 3.01 kΩ ±1%, 1/4 W, 100 PPM	19701	MF5C-D-3011-F	2	R2338
A6R37	RESISTOR, METAL FILM: 3.01 kΩ ±1%, 1/4 W, 100 PPM	19701	MF5C-D3011-F	2	R2338
A6R38	RESISTOR, COMP: 1.2 kΩ ±5%, 1/4 W	01121	CB1225	1	R0809
A6R39	Not Used				
A6R40	Not Used				
A6R41	RESISTOR, COMP: 3.3 kΩ ±5%, 1/4 W	01121	CB3325	2	R0742
A6R42	RESISTOR, COMP: 3.3 kΩ ±5%, 1/4 W	01121	CB3325	2	R0742
A6TP1	TEST POINT, BROWN	91506	8041-1G3	1	E0235
A6TP2	TEST POINT, RED	91506	8041-1G4	1	E0236
A6TP3	TEST POINT, ORANGE	91506	8041-1G5	1	E0237
A6TP4	TEST POINT, YELLOW	91506	8041-1G2	1	E0238
A6U1	INTEGRATED CIRCUIT: FET Input, OP AMP	27014	LH0022CH	2	045232
A6U2	INTEGRATED CIRCUIT: FET Input, OP AMP	27014	LH0022CH	2	045232
A6U3	INTEGRATED CIRCUIT: OP-01 + OP AMP	06665	OP-01EJ	2	025795

REPLACEABLE PARTS LIST

Equipment/Assembly Designation: A6, REFERENCE AND POWER SUPPLY #03755101 (Cont'd)

(1) Reference Designation	(2) Name of Component and Description	(3) Mfr's Code	(4) Manufacturer's Part Number	(5) No. Times Used	(6) Remarks/ SD Stock No.
A6U4	INTEGRATED CIRCUIT: OP AMP	27014	LM201A	1	025758
A6U5	INTEGRATED CIRCUIT: OP-01 + OP AMP	06665	OP-01EJ	2	025795
A6U6	INTEGRATED CIRCUIT: µA 723	27014	LM723CN	2	025761
A6U7	INTEGRATED CIRCUIT: µA 723	27014	LM723CN	2	025761
A6VR1	DIODE: 6.2 V 5%, 7.5 mA	04713	MZ620	1	CR0371
	EXTRACTOR, P.C. PLAIN	51495	1743	1	H1743
	EXTRACTOR, P.C., HOT STAMP, A6	06811	03984206	1	03984206
	PIN, SPRING	73957	50-094-0250	2	H1083
	TERMINAL: Swage bifurcated	88245	2000B	3	E0100

CIRCUIT DESCRIPTION
A10, ANALOG MOTHER-BOARD ASSEMBLY
SCHEMATIC #037204-7-1

The A10 Analog Mother-Board Assembly, carries sockets and interconnections for the analog boards, power supply components, and some of the circuit elements required in the control functions.

The main plus and minus 20 volt supply employs rectifiers A10CR1, 2, 3, and 4, and filter capacitors A10C1 and A10C2. The regulator circuits are on the A6 board, Reference and Power Supply.

The negative high-voltage bias supply for the Ohms Current Source high-voltage protection circuit is comprised of rectifiers, A10CR16, 17, 18, and 19, filter capacitor A10C13 and bleeder resistor A10R25. The capacitors,A10C14A and A10C14B, tend to filter out rectifier noise.

The rectifiers and filter capacitor elements for the floating power supplies for the Input amplifier are A10CR5, 6, 7, and 8, and A10C3 and A10C4. This circuit is mounted on a small board enclosed in a shield which is connected to the second shield, SH 5.5, on the power transformer. This shield is driven by the amplifier whose input is terminal 8 and 40. This amplifier input has negligible loading on the range resistor between the low side of the input amplifier and signal common. The unity gain amplifier output through A10R22 drives the capacitance between the shields of the power transformer and other leakage paths, which otherwise might shunt the range resistor.

Plus and minus 18-volt regulated supplies for the Ohms Current Source, are generated by the components connected between board terminals 4, 5, and 6 and A10A7, A10A8, and A10A9 terminals 1C, 2B and 3C. This regulator is similar to the one on the A6 board. It is isolated from the main power supply so that an isolated current source can be constructed for the four-wire ohm-measuring current source. A10Q13 drives a solenoid which couples information across the GUARD to indicate whether or not an option board is installed when the option's function is called. A10CR20 is grounded when kΩ is called and A10CR21 is grounded when AC is called; and when ungrounded, these points have an open circuit voltage of about 20 volts. If the AC converter board is installed, the junction of A10R15 and A10CR22 is grounded so that there will be no forward base bias on A10Q13 and no current will flow in the solenoid if AC VOLTS is called by the function switches. If the board had not been installed, then the junction of A10R15 and A10CR22 would not be grounded, and A10Q13 would have forward base biasing which will cause current to flow in the solenoid. The magnetic field coupled across the guard will operate the reed switch and generate the BAD RANGE logic signal which, in turn, will light the * on the readout panel. Operation for KΩ is similar except that the other pair of diodes are involved.

A10K21 provides for the connection of the internal reference voltage to the input of the Input Amplifier, so that operation of the amplifier and the A-D Converter can be checked. A10L22 in combination with A10S22 connects the ac input to the AC to DC Converter Board, and A10K16 connects the output of the converter to the input amplifier.

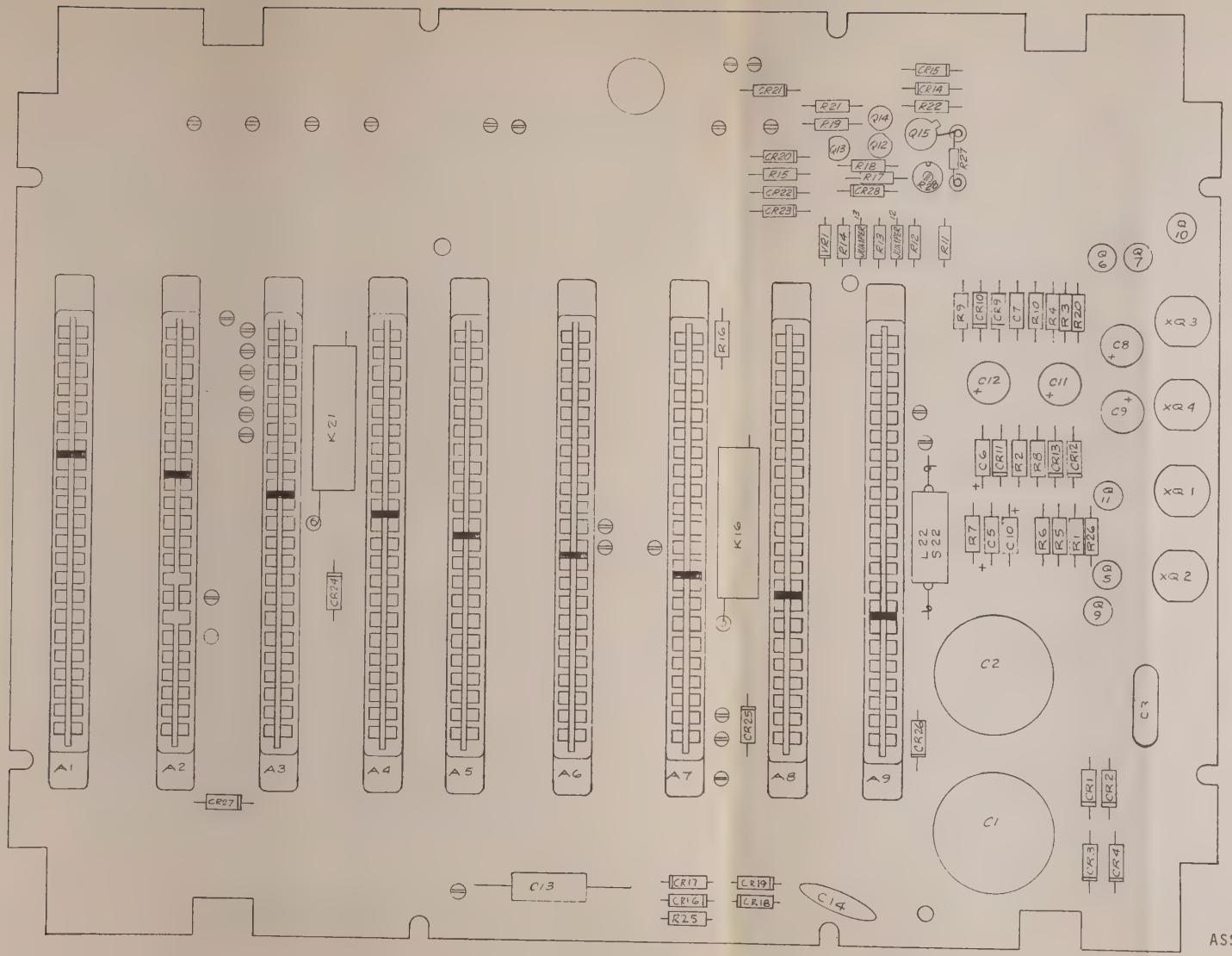

A10, ANALOG MOTHER
ASSEMBLY #037204-4-1 REV J

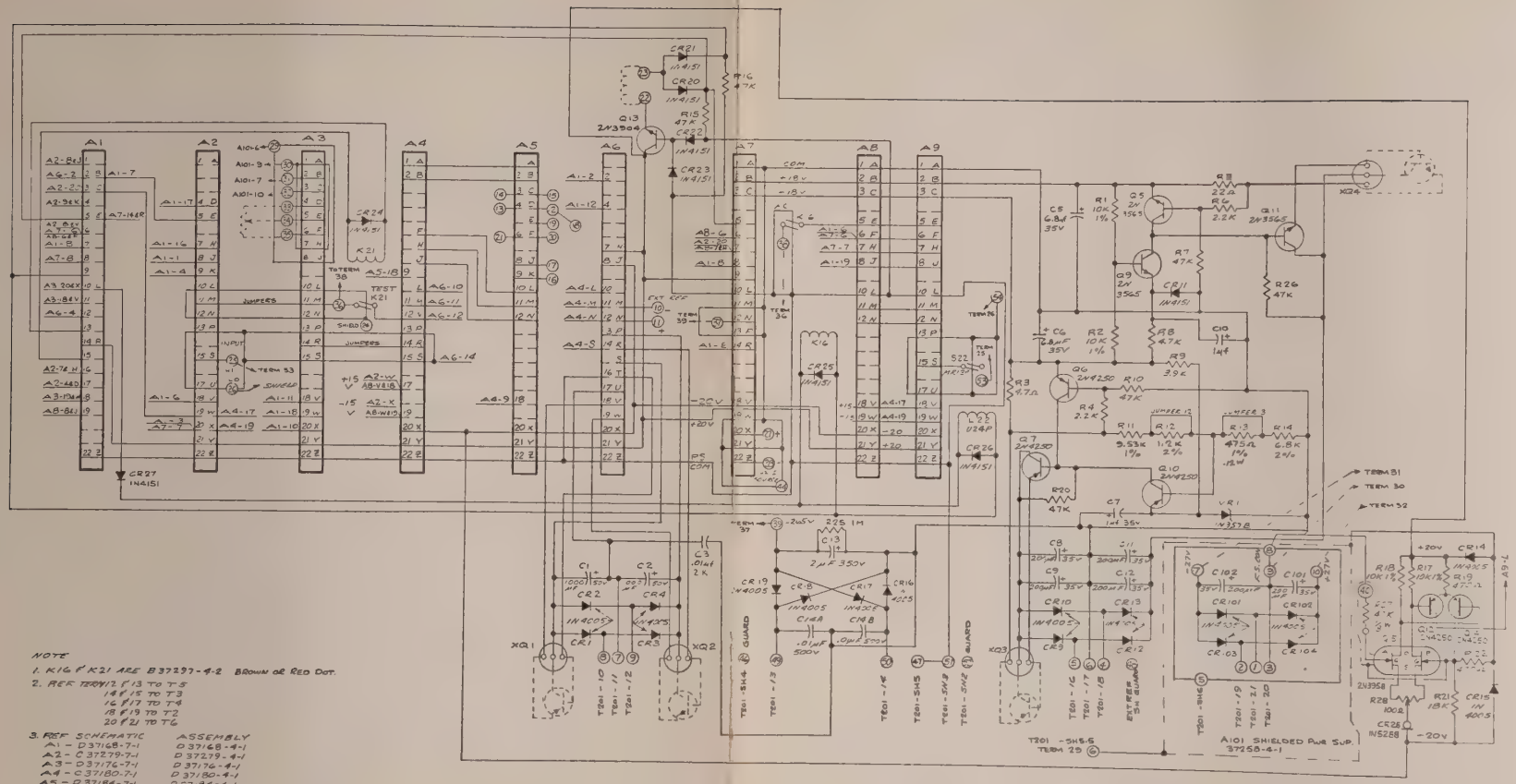

NOTE

1. K16 & K21 ARE B37297-4-2 BROWN OR RED DOT.
2. REF TERM'S 13 TO T5
   14 & 15 TO T3
   16 & 17 TO T4
   18 & 19 TO T2
   20 & 21 TO T6
3. REF SCHEMATIC — ASSEMBLY

A1 - D37168-7-1	D37168-4-1
A2 - C37279-7-1	D37279-4-1
A3 - D37176-7-1	D37176-4-1
A4 - C37180-7-1	D37180-4-1
A5 - D37184-7-1	D37184-4-1
A6 - D37189-7-1	D37188-4-1
A7 - C37192-7-1	D37192-4-1
A8 - 37196-7-1	37196-4-1
A9 - 37200-7-1	37200-4-1

A10, ANALOG MOTHER
SCHEMATIC #037204-7-1 REV F

REPLACEABLE PARTS LIST

Equipment/Assembly Designation A10, ANALOG MOTHER ASSEMBLY #037204-4-1

(1) Reference Designation	(2) Name of Component and Description	(3) Mfr's Code	(4) Manufacturer's Part Number	(5) No. Times Used	(6) Remarks/ SD Stock No.
	P.C. BOARD, ANALOG MOTHER ASSEMBLY	06811	037204-1-1	1	037204-1-1
A10C1	CAPACITOR, ELECTROLYTIC CAN: 1000 µF, P.C. mt., 50 Vdcw	99392	12C50FA13	2	C1258
A10C2	CAPACITOR, ELECTROLYTIC CAN: 1000 µF, P.C. mt., 50 Vdcw	99392	12C50FA13	2	C1258
A10C3	CAPACITOR, CERAMIC: .01 µF ±20%, 2 kV	56289	BL-S10	1	C1329
A10C4	Not used				
A10C5	CAPACITOR, TANT: 6.8 µF ±20%, 35 Vdcw	56289	150D685X9035B2	2	C0899
A10C6	CAPACITOR, TANT: 6.8 µF ±20%, 35 Vdcw	56289	150D685X9035B2	2	C0899
A10C7	CAPACITOR, TANT: 1 µF ±10%, 35 Vdcw	56289	150D105X9035A2	2	C0524
A10C8	CAPACITOR, ELECTROLYTIC CAN: 200 µF +100-10%, P.C. mt., 35 Vdcw	90201	MTV200DN35	4	C1259
A10C9	CAPACITOR, ELECTROLYTIC CAN: 200 µF +100-10%, P.C. mt., 35 Vdcw	90201	MTV200DN35	4	C1259
A10C10	CAPACITOR, TANT: 1 µF ±10%, 35 Vdcw	56289	150D105X9035A2	2	C0524
A10C11	CAPACITOR, ELECTROLYTIC CAN: 200 µF +100-10%, P.C. mt., 35 Vdcw	90201	MTV200DN35	4	C1259

REPLACEABLE PARTS LIST

Equipment/Assembly Designation A10, ANALOG MOTHER ASSEMBLY #037204-4-1 (Cont'd)

(1) Reference Designation	(2) Name of Component and Description	(3) Mfr's Code	(4) Manufacturer's Part Number	(5) No. Times Used	(6) Remarks/ SD Stock No.
A10C12	CAPACITOR, ELECTROLYTIC CAN: 200 µF +100-10%, P.C. mt., 35 Vdcw	90201	MTV200DN35	4	C1259
A10C13	CAPACITOR, ELECTROLYTIC AXIAL: 2 µF +100-10%, 350 Vdcw	90201	TC595	1	03291420
A10C14	CAPACITOR, CERAMIC: 2X .01 µF, 250 Vdcw, GMV	71590	DD3-103	1	C0971
A10CR1	SEMICONDUCTOR DEVICE, DIODE: Silicon, 600 Vdcw, 1 A	04713	1N4005	14	CR0284
A10CR2	SEMICONDUCTOR DEVICE, DIODE: Silicon, 600 Vdcw, 1 A	04713	1N4005	14	CR0284
A10CR3	SEMICONDUCTOR DEVICE, DIODE: Silicon, 600 Vdcw, 1 A	04713	1N4005	14	CR0284
A10CR4	SEMICONDUCTOR DEVICE, DIODE: Silicon, 600 Vdcw, 1 A	04713	1N4005	14	CR0284
A10CR5	Not used				
A10CR6	Not used				
A10CR7	Not used				
A10CR8	Not used				
A10CR9	SEMICONDUCTOR DEVICE, DIODE: Silicon, 600 Vdcw, 1 A	04713	1N4005	14	CR0284
A10CR10	SEMICONDUCTOR DEVICE, DIODE: Silicon, 600 Vdcw, 1 A	04713	1N4005	14	CR0284
A10CR11	SEMICONDUCTOR DEVICE, DIODE: Silicon, 50 Vdcw, 150 mA	03508	1N4151	9	CR0150

REPLACEABLE PARTS LIST

Equipment/Assembly Designation A10, ANALOG MOTHER ASSEMBLY #037204-4-1 (Cont'd)

(1) Reference Designation	(2) Name of Component and Description	(3) Mfr's Code	(4) Manufacturer's Part Number	(5) No. Times Used	(6) Remarks/ SD Stock No.
A10CR12	SEMICONDUCTOR DEVICE, DIODE: Silicon, 600 Vdcw, 1 A	04713	1N4005	14	CR0284
A10CR13	SEMICONDUCTOR DEVICE, DIODE: Silicon, 600 Vdcw, 1 A	04713	1N4005	14	CR0284
A10CR14	SEMICONDUCTOR DEVICE, DIODE: Silicon, 600 Vdcw, 1 A	04713	1N4005	14	CR0284
A10CR15	SEMICONDUCTOR DEVICE, DIODE: Silicon, 600 Vdcw, 1 A	04713	1N4005	14	CR0284
A10CR16	SEMICONDUCTOR DEVICE, DIODE: Silicon, 600 Vdcw, 1 A	04713	1N4005	14	CR0284
A10CR17	SEMICONDUCTOR DEVICE, DIODE: Silicon, 600 Vdcw, 1 A	04713	1N4005	14	CR0284
A10CR18	SEMICONDUCTOR DEVICE, DIODE: Silicon, 600 Vdcw, 1 A	04713	1N4005	14	CR0284
A10CR19	SEMICONDUCTOR DEVICE, DIODE: Silicon, 600 Vdcw, 1 A	04713	1N4005	14	CR0284
A10CR20	SEMICONDUCTOR DEVICE, DIODE: Silicon, 50 Vdcw, 150 mA	03508	1N4151	9	CR0150
A10CR21	SEMICONDUCTOR DEVICE, DIODE: Silicon, 50 Vdcw, 150 mA	03508	1N4151	9	CR0150
A10CR22	SEMICONDUCTOR DEVICE, DIODE: Silicon, 50 Vdcw, 150 mA	03508	1N4151	9	CR0150
A10CR23	SEMICONDUCTOR DEVICE, DIODE: Silicon, 50 Vdcw, 150 mA	03508	1N4151	9	CR0150
A10CR24	SEMICONDUCTOR DEVICE, DIODE: Silicon, 50 Vdcw, 150 mA	03508	1N4151	9	CR0150

REPLACEABLE PARTS LIST

Equipment/Assembly Designation A10, ANALOG MOTHER ASSEMBLY #037204-4-1 (Cont'd)

(1) Reference Designation	(2) Name of Component and Description	(3) Mfr's Code	(4) Manufacturer's Part Number	(5) No. Times Used	(6) Remarks/ SD Stock No.
A10CR25	SEMICONDUCTOR DEVICE, DIODE: Silicon, 50 Vdcw, 150 mA	03508	1N4151	9	CR0150
A10CR26	SEMICONDUCTOR DEVICE, DIODE: Silicon, 50 Vdcw, 150 mA	03508	1N4151	9	CR0150
A10CR27	SEMICONDUCTOR DEVICE, DIODE: Silicon, 50 Vdcw, 150 mA	03508	1N4151	9	CR0150
A10CR28	SEMICONDUCTOR DEVICE, DIODE: Current limited, .39 mA 10%, 100 Vdcw peak	04713	1N5288	1	CR0386
A10K16	SWITCH: Reed assembly, (low voltage)	06811	037462-4-1	2	037462-4-1
A10K21	SWITCH: Reed assembly, (low voltage)	06811	037462-4-1	2	037462-4-1
A10L22	COIL, REED: 24 Vdcw	71707	U-24-P	1	L0055
A10Q1	Not used				
A10Q2	Not used				
A10Q3	Not used				
A10Q4	Not used				
A10Q5	SEMICONDUCTOR DEVICE, TRANSISTOR: Silicon, NPN	07263	2N3565	3	26012000
A10Q6	SEMICONDUCTOR DEVICE, TRANSISTOR: Silicon, PNP	07263	2N4250	5	26014430
A10Q7	SEMICONDUCTOR DEVICE, TRANSISTOR: Silicon, PNP	07263	2N4250	5	26014430

REPLACEABLE PARTS LIST

Equipment/Assembly Designation A10, ANALOG MOTHER ASSEMBLY #037204-4-1 (Cont'd)

(1) Reference Designation	(2) Name of Component and Description	(3) Mfr's Code	(4) Manufacturer's Part Number	(5) No. Times Used	(6) Remarks/ SD Stock No.
A10Q8	Not Used				
A10Q9	SEMICONDUCTOR DEVICE, TRANSISTOR: Silicon, NPN	07263	2N3565	3	26012000
A10Q10	SEMICONDUCTOR DEVICE, TRANSISTOR: Silicon, PNP	07263	2N4250	5	26014430
A10Q11	SEMICONDUCTOR DEVICE, TRANSISTOR: Silicon, NPN	07263	2N3565	3	26012000
A10Q12	SEMICONDUCTOR DEVICE, TRANSISTOR: Silicon, PNP	07263	2N4250	5	26014430
A10Q13	SEMICONDUCTOR DEVICE, TRANSISTOR: Silicon, NPN	04713	2N3904	1	Q0247
A10Q14	SEMICONDUCTOR DEVICE, TRANSISTOR: Silicon, PNP	07263	2N4250	5	26014430
A10Q15	SEMICONDUCTOR DEVICE, TRANSISTOR: J FET N Channel	32293	2N3958	1	26015100
A10R1	RESISTOR, METAL FILM: 10.0 kΩ ±1%, .12 W, 100 PPM	19701	MF5C-D-1002-F	4	R2696
A10R2	RESISTOR, METAL FILM: 10.0 kΩ ±1%, .12 W, 100 PPM	19701	MF5C-D-1002-F	4	R2696
A10R3	RESISTOR, COMP: 4.7 Ω ±5%, 1/4 W	01121	CB47G5	1	R1741
A10R4	RESISTOR, COMP: 2.2 kΩ ±5%, 1/4 W	01121	CB2225	2	R0749
A10R5	RESISTOR, COMP: 22 Ω ±5%, 1/4 W	01121	CB2205	1	R1436
A10R6	RESISTOR, COMP: 2.2 kΩ ±5%, 1/4 W	01121	CB2225	2	R0749

REPLACEABLE PARTS LIST

Equipment/Assembly Designation A10, ANALOG MOTHER ASSEMBLY #037204-4-1 (Cont'd)

(1) Reference Designation	(2) Name of Component and Description	(3) Mfr's Code	(4) Manufacturer's Part Number	(5) No. Times Used	(6) Remarks/ SD Stock No.
A10R7	RESISTOR, COMP: 47 kΩ ±5%, 1/4 W	01121	CB4735	6	R0777
A10R8	RESISTOR, COMP: 4.7 kΩ ±5%, 1/4 W	01121	CB4725	1	R0892
A10R9	RESISTOR, COMP: 3.9 kΩ ±5%, 1/4 W	01121	CB3925	1	R0939
A10R10	RESISTOR, COMP: 47 kΩ ±5%, 1/4 W	01121	CB4735	6	R0777
A10R11	RESISTOR, METAL FILM: 9.53 kΩ ±1%, .12 W, 25 PPM	03888	PME60T9	1	R2572
A10R12	RESISTOR, METAL FILM: 1.21 kΩ ±1%, .12 W, 100 PPM	91637	MFF 1/8 T1	1	R2640
A10R13	RESISTOR, METAL FILM: 475 Ω ±1%, .12 W, 100 PPM	19701	MF5C-D-4750F	1	R2539
A10R14	RESISTOR, METAL FILM: 6.81 kΩ ±1%, .12 W, 100 PPM	91637	MFF 1/8	1	R2718
A10R15	RESISTOR, COMP: 47 kΩ ±5%, 1/4 W	01121	CB4735	6	R0777
A10R16	RESISTOR, COMP: 47 kΩ ±5%, 1/4 W	01121	CB4735	6	R0777
A10R17	RESISTOR, METAL FILM: 10.0 kΩ ±1%, .12 W, 100 PPM	19701	MF5C-D-1002-F	4	R2696
A10R18	RESISTOR, METAL FILM: 10.0 kΩ ±1%, .12 W, 100 PPM	19701	MF5C-D-1002-F	4	R2696
A10R19	RESISTOR, COMP: 470 Ω ±5%, 1/4 W	01121	CB4715	2	R1044

REPLACEABLE PARTS LIST

Equipment/Assembly Designation A10. ANALOG MOTHER ASSEMBLY #037204-4-1 (Cont'd)

(1) Reference Designation	(2) Name of Component and Description	(3) Mfr's Code	(4) Manufacturer's Part Number	(5) No. Times Used	(6) Remarks/ SD Stock No.
A10R20	RESISTOR, COMP: 47 kΩ ±5%, 1/4 W	01121	CB4735	6	R0777
A10R21	RESISTOR, COMP: 18 kΩ ±5%, 1/4 W	01121	CB1835	1	R0785
A10R22	RESISTOR, COMP: 470 Ω ±5%, 1/4 W	01121	CB4715	2	R1044
A10R23	Not used				
A10R24	Not used				
A10R25	RESISTOR, COMP: 1 MΩ ±5%, 1/4 W	01121	CB1055	1	R0962
A10R26	RESISTOR, COMP: 47 kΩ ±5%, 1/4 W	01121	CB4735	6	R0777
A10R27	RESISTOR, COMP: 47 kΩ ±5%, 1/8 W	01121	BB4735	1	R1433
A10R28	RESISTOR, POTENTIOMETER, CERAMIC: 100 Ω ±20%, 1/2 W, 1-turn, P.C. mt., top adjust	80294	3329H-1-101	1	R2374
A10S22	SWITCH: Dry reed, 10 mA, 1 kV	95348	MR-138	1	S0333
A10VR1	SEMICONDUCTOR DEVICE, DIODE, ZENER: 6.8 Vdcw, ±5%, 400 mW	04713	1N957B	1	CR0292
A10XQ1	TRANSISTOR, SOCKET: 3-pin, miniature	91662	05-3304-57	4	X0187
A10XQ2	TRANSISTOR, SOCKET: 3-pin, miniature	91662	05-3304-57	4	X0187

REPLACEABLE PARTS LIST

Equipment/Assembly Designation A10, ANALOG MOTHER ASSEMBLY #037204-4-1 (Cont'd)

(1) Reference Designation	(2) Name of Component and Description	(3) Mfr's Code	(4) Manufacturer's Part Number	(5) No. Times Used	(6) Remarks/ SD Stock No.
A10XQ3	TRANSISTOR, SOCKET: 3-pin, miniature	91662	05-3304-57	4	X0187
A10XQ4	TRANSISTOR, SOCKET: 3-pin, miniature	91662	05-3304-57	4	X0187
A10XA1	CONNECTOR, P.C.: 22-position, dual, tails cut	05574	000221-0178	7	102806
A10XA2	CONNECTOR, P.C.: 22-pin, modified	06811	037169-6-1	2	037169-6-1
A10XA3	CONNECTOR, P.C.: 22-position, dual, tails cut	05574	000221-0178	7	102806
A10XA4	CONNECTOR, P.C.: 22-position, dual, tails cut	05574	000221-0178	7	102806
A10XA5	CONNECTOR, P.C.: 22-position, dual, tails cut	05574	000221-0178	7	102806
A10XA6	CONNECTOR, P.C.: 22-position, dual, tails cut	05574	000221-0178	7	102806
A10XA7	CONNECTOR, P.C.: 22-position, dual, tails cut	05574	000221-0178	7	102806
A10XA8	CONNECTOR, P.C.: 22-position, dual, tails cut	05574	000221-0178	7	102806
A10XA9	CONNECTOR, P.C.: 22-pin, modified	06811	037169-6-1	2	037169-6-1
	TERMINAL: Swage bifurcated	88245	2000B	28	E0100
	TERMINAL: Press, single	98921	004-1007	1	E0333
	TERMINAL: Press, feed thru	98921	001-1007	1	E0335

REPLACEABLE PARTS LIST

Equipment/Assembly Designation A10, ANALOG MOTHER ASSEMBLY #037204-4-1 (Cont'd)

(1) Reference Designation	(2) Name of Component and Description	(3) Mfr's Code	(4) Manufacturer's Part Number	(5) No. Times Used	(6) Remarks/ SD Stock No.
	TERMINAL: Press, rev., insulated	71279	4034-3-0519	2	51024460
	KEY, POLARIZING	05574	091-0024-000	9	H1369
	TIE, CABLE: Nylon	06383	SST1M	A/R	H1104

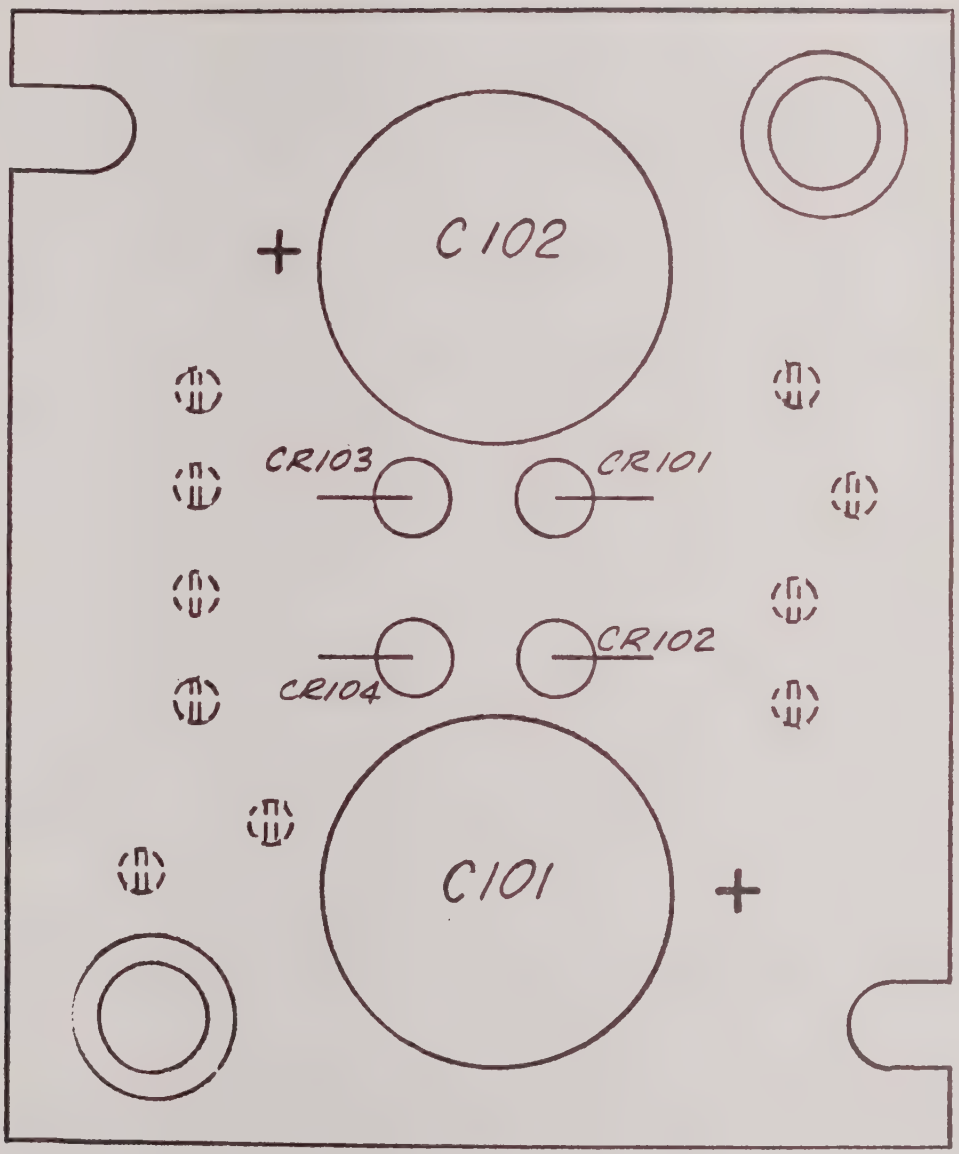

A101, SHIELDED POWER SUPPLY ASSEMBLY #037258-4-1 REV C

REPLACEABLE PARTS LIST

Equipment/Assembly Designation A101, SHIELDED POWER SUPPLY #037258-4-1

(1) Reference Designation	(2) Name of Component and Description	(3) Mfr's Code	(4) Manufacturer's Part Number	(5) No. Times Used	(6) Remarks/ SD Stock No.
	P.C. BOARD, POWER SUPPLY SHIELDED	06811	037258-1-1	1	037258-1-1
A101C101	CAPACITOR, ELECTROLYTIC CAN: 200 µF +100-10%, 35 Vdcw, P.C. mt.	90201	MTV200DN35	2	C1259
A101C102	CAPACITOR, ELECTROLYTIC CAN: 200 µF +100-10%, 35 Vdcw, P.C. mt.	90201	MTV200DN35	2	C1259
A101CR101	SEMICONDUCTOR DEVICE, DIODE: Silicon, 600 Vdcw, 1 A	04713	1N4005	4	CR0284
A101CR102	SEMICONDUCTOR DEVICE, DIODE: Silicon, 600 Vdcw, 1 A	04713	1N4005	4	CR0284
A101CR103	SEMICONDUCTOR DEVICE, DIODE: Silicon, 600 Vdcw, 1 A	04713	1N4005	4	CR0284
A101CR104	SEMICONDUCTOR DEVICE, DIODE: Silicon, 600 Vdcw, 1 A	04713	1N4005	4	CR0284
	SPACER: Swage 6-32 .625L X .25 RND	88245	1530 B 5/8	2	E0228

CIRCUIT DESCRIPTION
A11, DIGITAL COUNT AND CONTROL ASSEMBLY
SCHEMATIC #037208-7-1

The A11 Digital Count and Control Board, carries the circuits for counting the gated clock pulses, controlling part of the operational cycle of the measurement, and storing and presenting the measured value.

A11U12, 13, 14, 15, and 16 are decade counter elements. A11U17 is a dual JK flip-flop unit, half of which is connected to act as a complementing flip-flop at the end of the counting chain, with the domain of numbers ranging from 000,000 to 199,999. The count chain is driven by pulses coupled by transformer across the guard and amplified by A11Q18. The count chain is broken between the first flip-flop in the 10^2's order and its following scale of 5, with a gate and an inverter, A11U19, inserted. A11U6, 7, 8, 9, 10, and half of A11U17 are latches for storing the previous measurement number while the succeeding measurement is being made. A11U1, 2, 3, 4, and 5 are decoder-drivers for the gas discharge indicators. A11U11 is a dual JK flip-flop, one section of which is set by the negative polarity pulse and the other section of which functions as the latch, with A11Q13 and A11Q14 the drivers for the gas discharge (+,-) display tube. A11Q1, 2, 3, 4, 5, 15, 17, and 32 are annunciator driver transistors.

When clock signals are being supplied to the circuit, a .6 MHz signal exists at terminal 11 of A11U12. This signal is rectified by A11CR8 and A11CR9, charging A11C13. This signal is buffered by A11Q25 and applied to the trigger circuit comprised of A11Q26 and A11Q27 and associated components. The collector of A11Q27 takes on two values, being high when the unit is counting and low when it is not counting. This signal is inverted by A11U23. When counting stops in response to a zero detection in the analog section, terminal 6 of A11U23 goes high and the one-shot, A11U23C and A11U23D, is triggered to generate a pulse about 5 µs wide, which is named Transfer. When terminal 8 of A11U23 goes negative for the pulse duration, A11Q23 is turned off and the transfer line to all the latches goes positive. This line going low causes the highest order digit and the polarity sign information to appear at the output of the latch elements of the respective flip-flops.

The negative-going signal on the TRANSFER line triggers a one-shot, A11U22D and A11U25C, which generates a pulse named AUTO STROBE of about 5 µs duration. This pulse is inverted and delayed by A11U25F, followed by A11L31 and A11C32, and applied to gates A11U32A and A11J32C. Action of this circuit will be discussed in a later section. A11U24A, terminal 6, will go low turning A11Q28 off and allowing the emitter of the UJT, A11Q31, to rise at a rate determined by A11C30, A11R76, and the variable resistance of the front panel SAMPLE RATE control. The positive pulse generated on triggering of A11Q31 across A11R57 turns A11Q23 on and the negative pulse at its collector triggers the one-shot, A11U24B and

A11U25D, generating the negative reset pulse at 8 on A11U25D. The negative pulse is used to reset A11U26 to the BUSY condition, to reset half of A11U17 to the 1 condition, and half of A11U11 to the plus polarity condition. A11Q24 inverts the reset pulse for the counter elements and for the flip-flop, A11U20B and A11U20C, which, when reset, enables the multivibrator, A11U20A and A11U20D, whose output is in turn coupled across the instrument GUARD to start the measurement cycle.

The A-D Logic Control board now takes over control of the measurement cycle. When counting starts again, the input on terminal 4 of A11U20B goes negative, resetting the flip-flop and turning the multivibrator off. After 100,000 counts have been accumulated, a one-shot, A11U19A and A11U19D, is triggered by the 1 to 0 transition at terminal 13 of A11U17. The output of this one-shot generates the Full Scale pulse that is coupled across the GUARD to the analog section, and it resets both sections of A11U18, making terminals 9 and 12 low. With terminal 12 low, the gate between the scale of 2 and the scale of 5 sections in the 10^2 counter is opened. The carry pulse from the 10's counter occurring at the 99 to 00 transition sets one of the flip-flops making terminal 8 low and terminal 9 high. Terminal 8 going low turns off A11Q19 to generate the complement pulse which is coupled across the GUARD. Terminal 9 going positive primes the other flip-flop so that the next carry pulse will cause it to be set, which closes the gate between the two sections of the 10^2 counter with a zero in the first section. Counting continues in the normal pattern until the clock signal is gated off in the analog section. In the event that the clock is gated off before 200 counts have been generated after Full Scale, terminal 12 of A11U18 will be low and A11Q21 biased off. The TRANSFER pulse will turn A11Q22 off, opening the emitter circuit of A11Q24 which resets the count chain to zero, and gives a count of zero for all conditions which might cause the clock to be gated off before the 200th pulse is generated. This circuitry functions to give good linear response for voltage in the neighborhood of zero.

The autoranging function is accomplished by using the data stored in the latches to operate gates to either change down-range to a more sensitive condition, make no range change, or to up-range to a less sensitive range. The same gates are also used to generate the signal which energized the annunciator which shows overrange. Output at terminal 6 of A11U28 is low if the count is less than 11×10^3.

If this voltage is low and if the control voltage AUTO is also low, then terminal 9 of A11U34 will be high. If the instrument is not on the lowest range, terminal 10 high, then during the AUTO STROBE pulse on terminal 11, a negative pulse as wide as the AUTO STROBE pulse will be generated at the down input terminal of the forward-backward counter, A11U35, and its state will change to a lower number. Outputs from the first three stages of this counter are coupled into a decoder-driver, 3 bits, 1, 2, and 4, and the 8th bit input to the decoder is connected to the AUTO

control which is high when not in the autorange condition, thus, adding the 8th bit to the count from the counter. With the 8th bit high none of the decoded outputs 0 through 7 will be low, but if AUTO is low then the three input states will be decoded and one of the range control lines will be low. The 4 and 5 count out of the decoder are tied together so that in the 100-volt range two trials are made and the unit has more time to come to a correct reading following the step change of input due to range switching. The 100-volt range has the slowest response time because of the high source impedance of the input attenuator. The 0 and 1 count are tied together to use the eight states of the decoder output.

Up-ranging functions in a similar manner with terminal 6 of A11U30 low on counts of 3 and 7 x 10^4, and terminal 6 of A11U32 high on counts of 3 through 9 x 10^4. Terminal 11 of A11U30 is low for counts 13 through 19 x 10^4 making terminal 1 of A11U33 high if AUTO is low. This signal is added with HIGHEST range signal and the AUTO STROBE pulse to give a negative pulse for up ranging. When a range change is indicated, a signal is generated at terminal 8 of A11U29 and fed to terminals 4 and 5 of A11U27. The other input to this gate is driven by the delayed AUTO STROBE pulse and if a range change was indicated, then flip-flop, A11U28B and A11U29D, is set. This action turns off the normal sample rate delay circuit and turns on the 40 ms delay generator whose pulse output drives the reset circuit to make a second reading, and also to reset this flip-flop. This circuit causes the unit to make one more reading on the supposedly correct range selected by autoranging. This results in a more accurate reading since the settling time of the unit to a step change is not appreciably shorter than the 40 ms delay between a range change and the next reading when the filter is being used.

The output from the above flip-flop is also coupled to one of the gate inputs of the JK flip-flop A11U26 which is reset by the reset pulse and set by the differentiated COUNTING control signal. A PRINT signal is generated when no range change is required on AUTO RANGE or when the start signal has been stored.

A flip-flop using two sections of A11U22 can be set by the front panel pushbutton or by grounding terminal 46 to the BCD output connector, J207. When this flip-flop is set, the COUNTING logic level will trigger the multivibrator. A11U21, whose period is greater than the sum of the transfer pulse and the AUTO STROBE pulse, and the trailing edge of this pulse, resets the start flip-flop and it in turn drives the reset generator. This circuitry allows one to instruct the instrument to make a measurement and it will then make a complete new reading by the most expeditious manner. The instrument cannot be interrupted in the middle of its integration cycle so that if it is in mid-cycle, the operation continues until the clock is gated off.

For those applications where the data receiving device cannot store the information out immediately, two methods are provided for the data receiver to halt the cycle. One is the INHIBIT

RESET and the other is the INHIBIT TRANSFER command connection. If the INHIBIT RESET line is grounded after the PRINT command comes high, then the cycle stops. The cycle continues with a delay to reset and the next measurement with the release of the INHIBIT RESET line. If the INHIBIT RESET line is grounded and the instrument is given a START command, it will make a measurement and wait for the next START command before continuing. If the data receiver needs to hold previous data after it has generated a START command, then the data receiver can ground the INHIBIT TRANSFER line and hold the transfer of new data until after the release of this line. Hold TRANSFER should not be generated until after BUSY is received. For fastest data transfer: receive PRINT, generate START, receive BUSY, generate HOLD TRANSFER, extract data, and release HOLD TRANSFER.

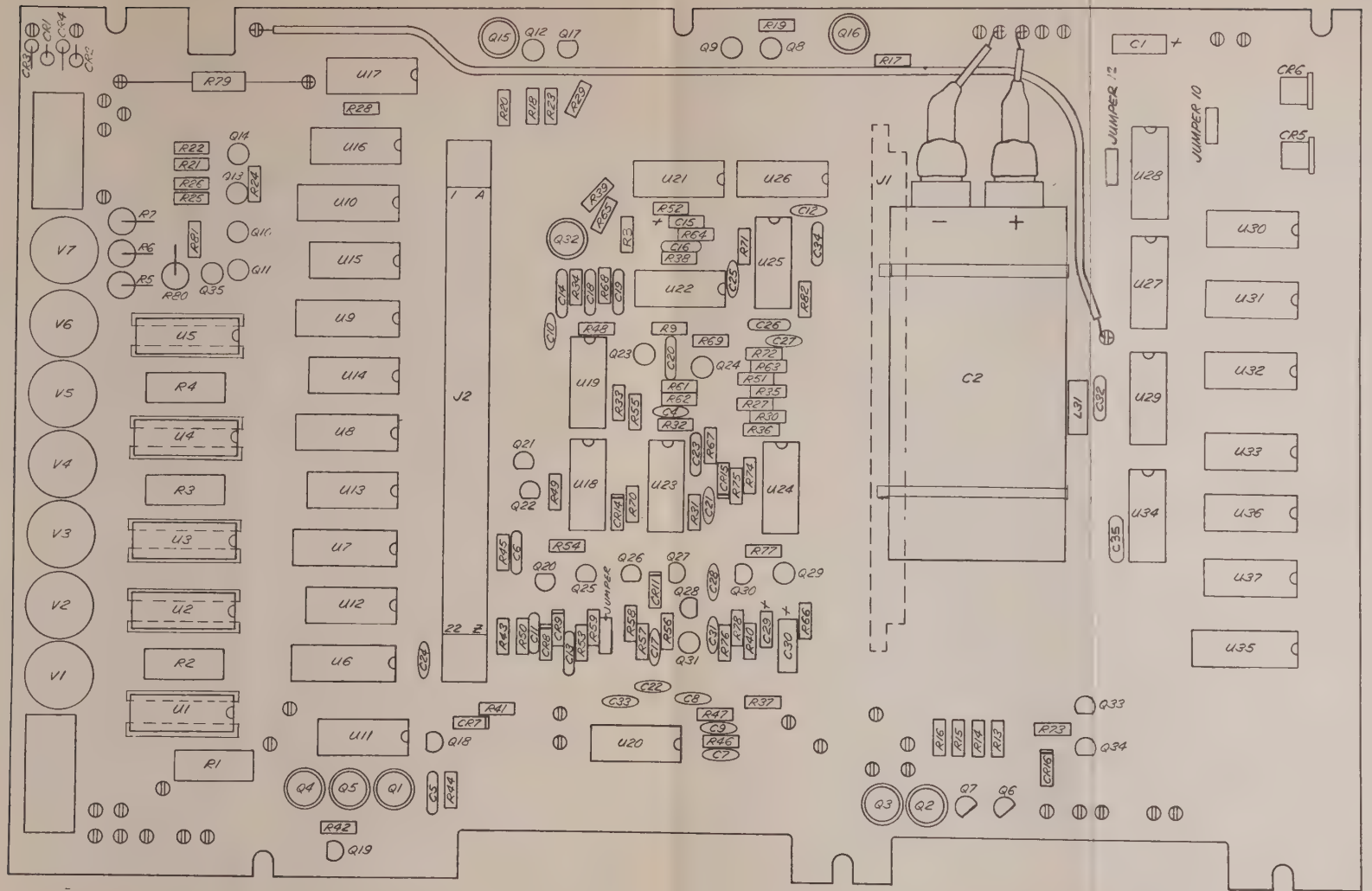

A11, DIGITAL COUNT AND CONTROL
ASSEMBLY #037208-4-1 REV D

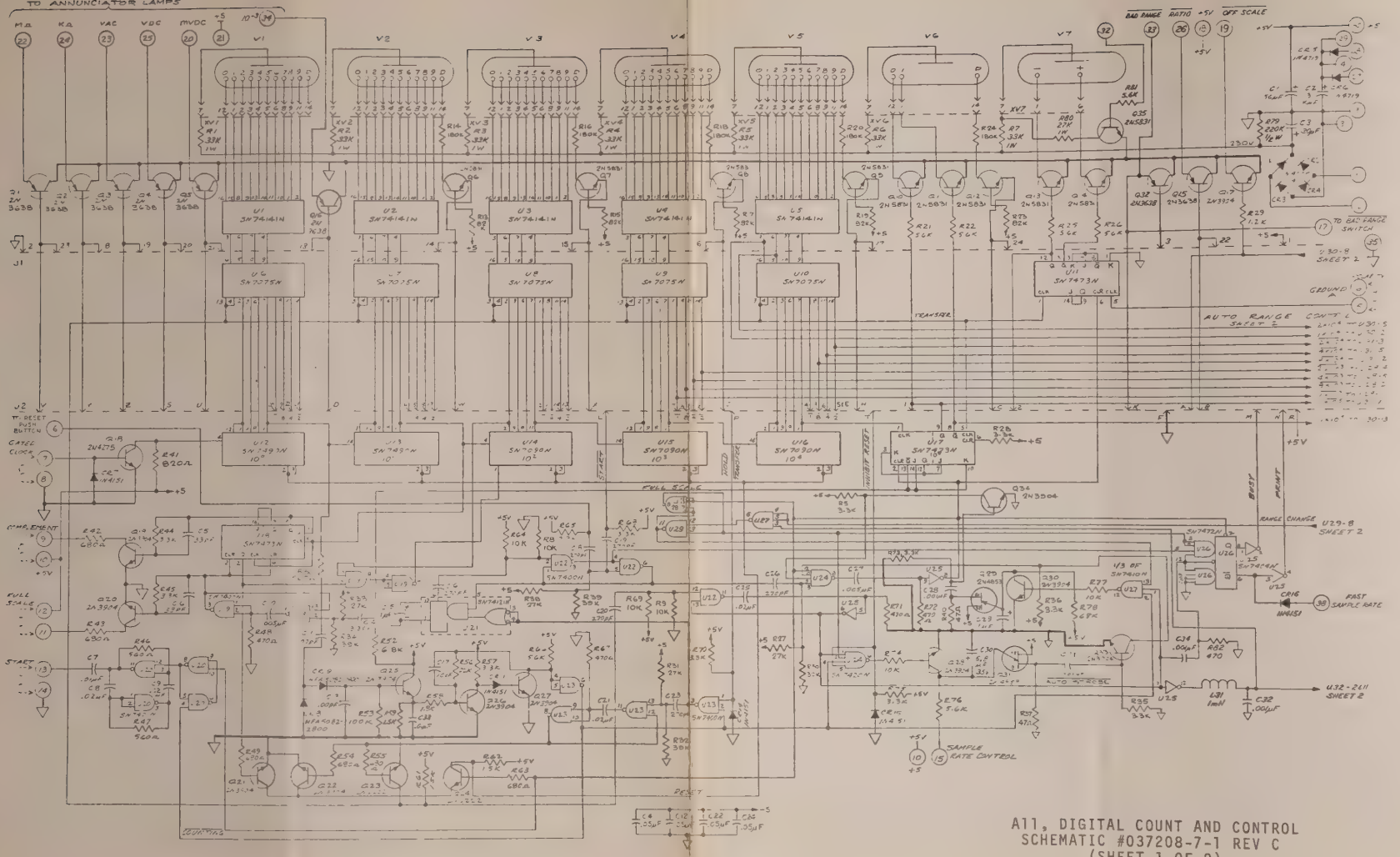

A11, DIGITAL COUNT AND CONTROL
SCHEMATIC #037208-7-1 REV C
(SHEET 1 OF 2)

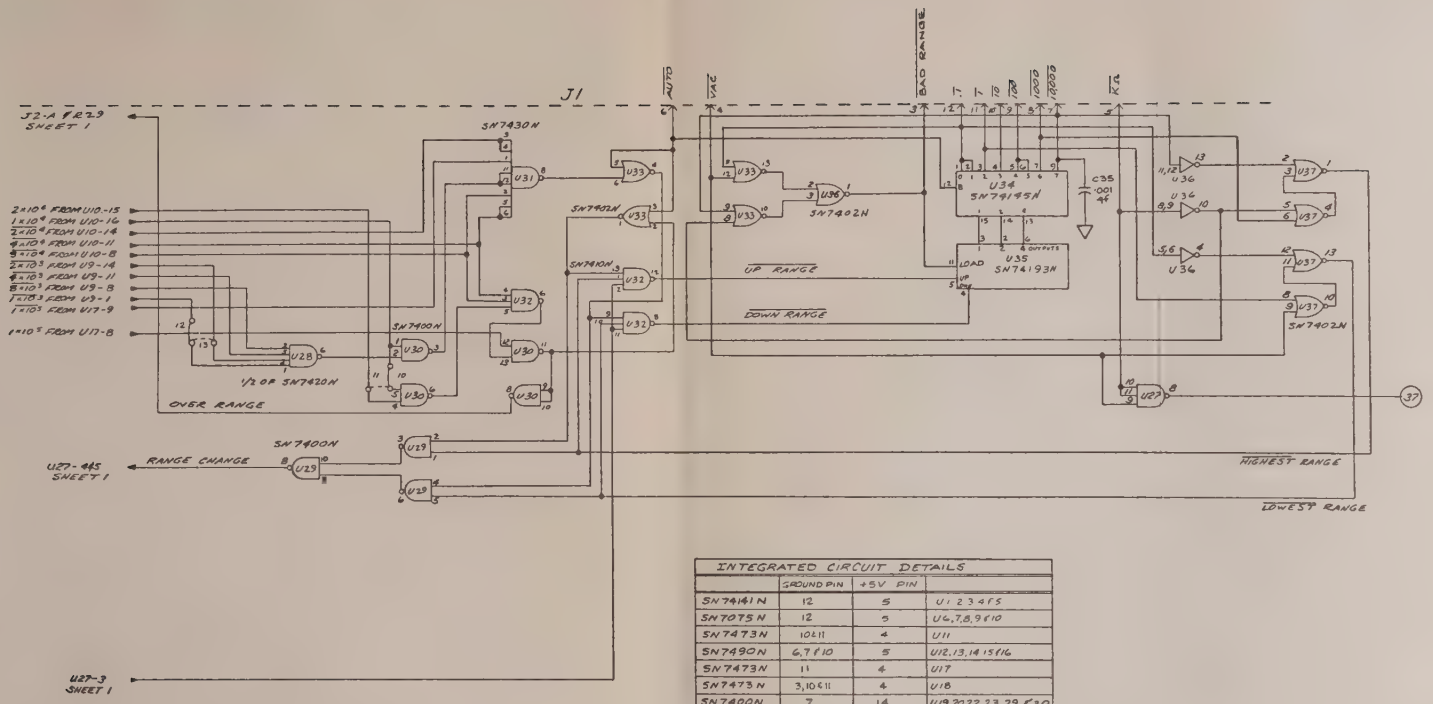

INTEGRATED CIRCUIT DETAILS			
	GROUND PIN	+5V PIN	
SN74141N	12	5	U1 2 3 4 & 5
SN7075N	12	5	U6,7,8,9 & 10
SN7473N	10 & 11	4	U11
SN7490N	6,7 & 10	5	U12,13,14 15 & 16
SN7473N	11	4	U17
SN7473N	3,10 & 11	4	U18
SN7400N	7	14	U19,20,22,23,29 & 30
SN74121N	7	14	U21
SN7420N	7	14	U24 & U28
SN7404N	7	14	U25
SN7472N	7,9,10 & 11	14	U26
SN7410N	7	14	U27 & U32
SN7430N	7	14	U31
SN7402N	7	14	U33, 37 & U36
SN74145N	■	16	U34
SN74193N	8,9,14 & 15	1,10 & 16	U35

A11, DIGITAL COUNT AND CONTROL
SCHEMATIC #037208-7-1 REV C
(SHEET 2 OF 2)

REPLACEABLE PARTS LIST

Equipment/Assembly Designation A11, DIGITAL COUNT AND CONTROL #037208-4-1

(1) Reference Designation	(2) Name of Component and Description	(3) Mfr's Code	(4) Manufacturer's Part Number	(5) No. Times Used	(6) Remarks/ SD Stock No.
	P.C. BOARD, DIGITAL COUNT AND CONTROL	06811	037208-1-1	1	037208-1-1
A11C1	CAPACITOR, TANT: 56 µF ±10%, 6 Vdcw	56289	150D566X9006B2	1	C1090
A11C2	CAPACITOR, ELECTROLYTIC CAN: 13 mF +100-10%, 12 Vdcw	00853	500-3030-02	1	C1122
A11C3	Not used				
A11C4	CAPACITOR, CERAMIC: .05 µF +80-20%, 10 Vdcw	71590	UK10-503	4	C0672
A11C5	CAPACITOR, MICA: 33 pF ±5%, 500 Vdcw, crimp lead	72136	DM15ED330J0	3	C0531
A11C6	CAPACITOR, MICA: 33 pF ±5%, 500 Vdcw, crimp lead	72136	DM15ED33J0	3	C0531
A11C7	CAPACITOR, CERAMIC: .01 µF +80-20%, 100 Vdcw	91418	TA110	2	C0556
A11C8	CAPACITOR, CERAMIC: .02 µF +60-40%, 150 Vdcw	71590	DDM203	4	C0322
A11C9	CAPACITOR, CERAMIC: .02 µF +60-40%, 150 Vdcw	71590	DDM203	4	C0322
A11C10	CAPACITOR, CERAMIC: .005 µF +60-40%, 150 Vdcw	71590	DDM502	2	C0325

REPLACEABLE PARTS LIST

Equipment/Assembly Designation A11, DIGITAL COUNT AND CONTROL #037208-4-1 (Cont'd)

(1) Reference Designation	(2) Name of Component and Description	(3) Mfr's Code	(4) Manufacturer's Part Number	(5) No. Times Used	(6) Remarks/ SD Stock No.
A11C11	CAPACITOR, MICA: 100 pF ±5%, 500 Vdcw, crimp lead	72136	DM15FD101J0	2	C0536
A11C12	CAPACITOR, CERAMIC: .05 µF +80-20%, 10 Vdcw	71590	UK10-503	4	C0672
A11C13	CAPACITOR, MICA: 100 pF ±5%, 500 Vdcw, crimp lead	72136	DM15FD101J0	2	C0536
A11C14	CAPACITOR, MICA: 33 pF ±5%, 500 Vdcw, crimp lead	72136	DM15ED330J0	3	C0531
A11C15	CAPACITOR, TANT: 1 µF ±10%, 35 Vdcw	56289	150D105X9035A2	2	C0524
A11C16	CAPACITOR, MICA: 270 pF ±5%, 500 Vdcw, crimp lead	72136	DM15FD271J0	6	C0539
A11C17	CAPACITOR, CERAMIC: 10 pF, .5 pF tolerance, 1 kV	72982	831-000C0G0100D	1	C1218
A11C18	CAPACITOR, MICA: 270 pF ±5%, 500 Vdcw, crimp lead	72136	DM15FD271J0	6	C0539
A11C19	CAPACITOR, MICA: 270 pF ±5%, 500 Vdcw, crimp lead	72136	DM15FD271J0	6	C0539
A11C20	CAPACITOR, MICA: 270 pF ±5%, 500 Vdcw, crimp lead	72136	DM15FD271J0	6	C0539

REPLACEABLE PARTS LIST

Equipment/Assembly Designation A11, DIGITAL COUNT AND CONTROL #037208-4-1 (Cont'd)

(1) Reference Designation	(2) Name of Component and Description	(3) Mfr's Code	(4) Manufacturer's Part Number	(5) No. Times Used	(6) Remarks/ SD Stock No.
A11C21	CAPACITOR, CERAMIC: .02 µF +60-40%, 150 Vdcw	71590	DDM203	4	C0322
A11C22	CAPACITOR, CERAMIC: .05 µF +80-20%, 10 Vdcw	71590	UK10-503	4	C0672
A11C23	CAPACITOR, MICA: 270 pF ±5%, 500 Vdcw, crimp lead	72136	DM15FD271J0	6	C0539
A11C24	CAPACITOR, CERAMIC: .05 µF +80-20%, 10 Vdcw	71590	UK10-503	4	C0672
A11C25	CAPACITOR, CERAMIC: .02 µF +60-40%, 150 Vdcw	71590	DDM203	4	C0322
A11C26	CAPACITOR, MICA: 270 pF ±5%, 500 Vdcw, crimp lead	72136	DM15FD271J0	6	C0539
A11C27	CAPACITOR, CERAMIC: .005 µF +60-40%, 150 Vdcw	71590	DDM502	2	C0325
A11C28	CAPACITOR, CERAMIC: .001 µF ±20%, 1 kV, Z5U	91418	Type B	3	C0424
A11C29	CAPACITOR, TANT: 1 µF ±10%, 35 Vdcw	56289	150D105X9035A2	2	C0524
A11C30	CAPACITOR, TANT: 6.8 µF ±20%, 35 Vdcw	56289	150D685X9035B2	1	C0899
A11C31	CAPACITOR, CERAMIC: .001 µF ±20%, 1 kV, Z5U	91418	Type B	3	C0424
A11C32	CAPACITOR, MICA: .001 µF ±5%, 100 Vdcw	72136	DM15FA102J0	2	C1144

REPLACEABLE PARTS LIST

Equipment/Assembly Designation A11, DIGITAL COUNT AND CONTROL #037208-4-1 (Cont'd)

(1) Reference Designation	(2) Name of Component and Description	(3) Mfr's Code	(4) Manufacturer's Part Number	(5) No. Times Used	(6) Remarks/ SD Stock No.
A11C33	CAPACITOR, CERAMIC: .01 µF +80-20%, 100 Vdcw	91418	TA110	2	C0556
A11C34	CAPACITOR, MICA: .001 µF ±5%, 100 Vdcw	72136	DM15FA102J0	2	C1144
A11C35	CAPACITOR, CERAMIC: .001 µF ±20%, 1 kV, Z5U	91418	Type B	3	C0424
A11CR1	SEMICONDUCTOR DEVICE, DIODE: Silicon, 600 Vdcw, 1 A	04713	1N4005	4	CR0284
A11CR2	SEMICONDUCTOR DEVICE, DIODE: Silicon, 600 Vdcw, 1 A	04713	1N4005	4	CR0284
A11CR3	SEMICONDUCTOR DEVICE, DIODE: Silicon, 600 Vdcw, 1 A	04713	1N4005	4	CR0284
A11CR4	SEMICONDUCTOR DEVICE, DIODE: Silicon, 600 Vdcw, 1 A	04713	1N4005	4	CR0284
A11CR5	SEMICONDUCTOR DEVICE, DIODE: Silicon, 50 Vdcw, 3 A	81483	1N4719	2	CR0251
A11CR6	SEMICONDUCTOR DEVICE, DIODE: Silicon, 50 Vdcw, 3 A	81483	1N4719	2	CR0251
A11CR7	SEMICONDUCTOR DEVICE, DIODE: Silicon, 50 Vdcw, 150 mA	03508	1N4151	5	CR0150
A11CR8	SEMICONDUCTOR DEVICE, DIODE: 100 ps, 70 Vdcw, ultra-fast switch	28480	5082-2800	2	CR0363
A11CR9	SEMICONDUCTOR DEVICE, DIODE: 100 ps, 70 Vdcw, ultra-fast switch	28480	5082-2800	2	CR0363

REPLACEABLE PARTS LIST

Equipment/Assembly Designation A11, DIGITAL COUNT AND CONTROL #037208-4-1 (Cont'd)

(1) Reference Designation	(2) Name of Component and Description	(3) Mfr's Code	(4) Manufacturer's Part Number	(5) No. Times Used	(6) Remarks/ SD Stock No.
A11CR10	Not used				
A11CR11	SEMICONDUCTOR DEVICE, DIODE: Silicon, 50 Vdcw, 150 mA	03508	1N4151	5	CR0150
A11CR12	Not used				
A11CR13	Not used				
A11CR14	SEMICONDUCTOR DEVICE, DIODE: Silicon, 50 Vdcw, 150 mA	03508	1N4151	5	CR0150
A11CR15	SEMICONDUCTOR DEVICE, DIODE: Silicon, 50 Vdcw, 150 mA	03508	1N4151	5	CR0150
A11CR16	SEMICONDUCTOR DEVICE, DIODE: Silicon, 50 Vdcw, 150 mA	03508	1N4151	5	CR0150
A11J1	CONNECTOR, P.C.: 24-pin, female receptacle, 90 degree	26742	92-6024-1800-00	1	J0609
A11J2	CONNECTOR, P.C.: 22-position, dual, tails cut	05574	000221-0178	1	J0192
A11L31	INDUCTOR, FIXED: 1.0 mH, 5%	72259	WEE-1000	1	L0068
A11Q1	SEMICONDUCTOR DEVICE, TRANSISTOR: Silicon, PNP	07263	2N3638	8	Q0181
A11Q2	SEMICONDUCTOR DEVICE, TRANSISTOR: Silicon, PNP	07263	2N3638	8	Q0181
A11Q3	SEMICONDUCTOR DEVICE, TRANSISTOR: Silicon, PNP	07263	2N3638	8	Q0181
A11Q4	SEMICONDUCTOR DEVICE, TRANSISTOR: Silicon, PNP	07263	2N3638	8	Q0181

REPLACEABLE PARTS LIST

Equipment/Assembly Designation A11, DIGITAL COUNT AND CONTROL #037208-4-1 (Cont'd)

(1) Reference Designation	(2) Name of Component and Description	(3) Mfr's Code	(4) Manufacturer's Part Number	(5) No. Times Used	(6) Remarks/ SD Stock No.
A11Q5	SEMICONDUCTOR DEVICE, TRANSISTOR: Silicon, PNP	07263	2N3638	8	Q0181
A11Q6	SEMICONDUCTOR DEVICE, TRANSISTOR: Silicon, NPN, 160 Vdcw	07263	2N5831	10	26004021
A11Q7	SEMICONDUCTOR DEVICE, TRANSISTOR: Silicon, NPN, 160 Vdcw	07263	2N5831	10	26004021
A11Q8	SEMICONDUCTOR DEVICE, TRANSISTOR: Silicon, NPN, 160 Vdcw	07263	2N5831	10	26004021
A11Q9	SEMICONDUCTOR DEVICE, TRANSISTOR: Silicon, NPN, 160 Vdcw	07263	2N5831	10	26004021
A11Q10	SEMICONDUCTOR DEVICE, TRANSISTOR: Silicon, NPN, 160 Vdcw	07263	2N5831	10	26004021
A11Q11	SEMICONDUCTOR DEVICE, TRANSISTOR: Silicon, NPN, 160 Vdcw	07263	2N5831	10	26004021
A11Q12	SEMICONDUCTOR DEVICE, TRANSISTOR: Silicon, NPN, 160 Vdcw	07263	2N5831	10	26004021
A11Q13	SEMICONDUCTOR DEVICE, TRANSISTOR: Silicon, NPN, 160 Vdcw	07263	2N5831	10	26004021
A11Q14	SEMICONDUCTOR DEVICE, TRANSISTOR: Silicon, NPN, 160 Vdcw	07263	2N5831	10	26004021

REPLACEABLE PARTS LIST

Equipment/Assembly Designation A11, DIGITAL COUNT AND CONTROL #037208-4-1 (Cont'd)

(1) Reference Designation	(2) Name of Component and Description	(3) Mfr's Code	(4) Manufacturer's Part Number	(5) No. Times Used	(6) Remarks/ SD Stock No.
A11Q15	SEMICONDUCTOR DEVICE, TRANSISTOR: Silicon, PNP	07263	2N3638	8	Q0181
A11Q16	SEMICONDUCTOR DEVICE, TRANSISTOR: Silicon, PNP	07263	2N3638	8	Q0181
A11Q17	SEMICONDUCTOR DEVICE, TRANSISTOR: Silicon, NPN	04713	2N3904	12	Q0247
A11Q18	SEMICONDUCTOR DEVICE, TRANSISTOR: Silicon, NPN	07263	2N4275	1	26013140
A11Q19	SEMICONDUCTOR DEVICE, TRANSISTOR: Silicon, NPN	04713	2N3904	10	Q0247
A11Q20	SEMICONDUCTOR DEVICE, TRANSISTOR: Silicon, NPN	04713	2N3904	10	Q0247
A11Q21	SEMICONDUCTOR DEVICE, TRANSISTOR: Silicon, NPN	04713	2N3904	10	Q0247
A11Q22	SEMICONDUCTOR DEVICE, TRANSISTOR: Silicon, NPN	04713	2N3904	10	Q0247
A11Q23	SEMICONDUCTOR DEVICE, TRANSISTOR: Silicon, NPN	04713	2N2222	2	Q0116
A11Q24	SEMICONDUCTOR DEVICE, TRANSISTOR: Silicon, NPN	04713	2N2222	2	Q0116
A11Q25	SEMICONDUCTOR DEVICE, TRANSISTOR: Silicon, NPN	04713	2N3904	12	Q0247
A11Q26	SEMICONDUCTOR DEVICE, TRANSISTOR: Silicon, NPN	04713	2N3904	12	Q0247
A11Q27	SEMICONDUCTOR DEVICE, TRANSISTOR: Silicon, NPN	04713	2N3904	12	Q0247

REPLACEABLE PARTS LIST

Equipment/Assembly Designation: A11, DIGITAL COUNT AND CONTROL #037208-4-1 (Cont'd)

(1) Reference Designation	(2) Name of Component and Description	(3) Mfr's Code	(4) Manufacturer's Part Number	(5) No. Times Used	(6) Remarks/ SD Stock No.
A11Q28	SEMICONDUCTOR DEVICE, TRANSISTOR: Silicon, NPN	04713	2N3904	12	Q0247
A11Q29	SEMICONDUCTOR DEVICE, TRANSISTOR: Unijunction	04713	2N4853	2	Q0249
A11Q30	SEMICONDUCTOR DEVICE, TRANSISTOR: Silicon, NPN	04713	2N3904	12	Q0247
A11Q31	SEMICONDUCTOR DEVICE, TRANSISTOR: Unijunction	04713	2N4853	2	Q0249
A11Q32	SEMICONDUCTOR DEVICE, TRANSISTOR: Silicon, PNP	07263	2N3638	8	Q0181
A11Q33	SEMICONDUCTOR DEVICE, TRANSISTOR: Silicon, NPN	04713	2N3904	12	Q0247
A11Q34	SEMICONDUCTOR DEVICE, TRANSISTOR: Silicon, NPN	04713	2N3904	12	Q0247
A11Q35	SEMICONDUCTOR DEVICE, TRANSISTOR: Silicon, NPN, 160 Vdcw	07263	2N5831	10	26004021
A11R1	RESISTOR, COMP: 33 kΩ ±5%, 1 W	01121	GB3335	7	R1263
A11R2	RESISTOR, COMP: 33 kΩ ±5%, 1 W	01121	GB3335	7	R1263
A11R3	RESISTOR, COMP: 33 kΩ ±5%, 1 W	01121	GB3335	7	R1263
A11R4	RESISTOR, COMP: 33 kΩ ±5%, 1 W	01121	GB3335	7	R1263
A11R5	RESISTOR, COMP: 33 kΩ ±5%, 1 W	01121	GB3335	7	R1263

REPLACEABLE PARTS LIST

Equipment/Assembly Designation A11, DIGITAL COUNT AND CONTROL #037208-4-1 (Cont'd)

(1) Reference Designation	(2) Name of Component and Description	(3) Mfr's Code	(4) Manufacturer's Part Number	(5) No. Times Used	(6) Remarks/ SD Stock No.
A11R6	RESISTOR, COMP: 33 kΩ ±5%, 1 W	01121	GB3335	7	R1263
A11R7	RESISTOR, COMP: 33 kΩ ±5%, 1 W	01121	GB3335	7	R1263
A11R8	RESISTOR, COMP: 10 kΩ ±5%, 1/4 W	01121	CB1035	6	R0766
A11R9	RESISTOR, COMP: 10 kΩ ±5%, 1/4 W	01121	CB1035	6	R0766
A11R10	Not used				
A11R11	Not used				
A11R12	Not used				
A11R13	RESISTOR, COMP: 82 kΩ ±5%, 1/4 W	01121	CB8235	5	R0784
A11R14	RESISTOR, COMP: 180 kΩ ±5%, 1/4 W	01121	CB1845	5	R1042
A11R15	RESISTOR, COMP: 82 kΩ ±5%, 1/4 W	01121	CB8235	5	R0784
A11R16	RESISTOR, COMP: 180 kΩ ±5%, 1/4 W	01121	CB1845	5	R1042
A11R17	RESISTOR, COMP: 82 kΩ ±5%, 1/4 W	01121	CB8235	5	R0784
A11R18	RESISTOR, COMP: 180 kΩ ±5%, 1/4 W	01121	CB1845	5	R1042
A11R19	RESISTOR, COMP: 82 kΩ ±5%, 1/4 W	01121	CB8235	5	R0784

REPLACEABLE PARTS LIST

Equipment/Assembly Designation A11, DIGITAL COUNT AND CONTROL #037208-4-1 (Cont'd)

(1) Reference Designation	(2) Name of Component and Description	(3) Mfr's Code	(4) Manufacturer's Part Number	(5) No. Times Used	(6) Remarks/ SD Stock No.
A11R20	RESISTOR, COMP: 180 kΩ ±5%, 1/4 W	01121	CB1845	5	R1042
A11R21	RESISTOR, COMP: 5.6 kΩ ±5%, 1/4 W	01121	CB5625	7	R0821
A11R22	RESISTOR, COMP: 5.6 kΩ ±5%, 1/4 W	01121	CB5625	7	R0821
A11R23	RESISTOR, COMP: 82 kΩ ±5%, 1/4 W	01121	CB8235	5	R0784
A11R24	RESISTOR, COMP: 180 kΩ ±5%, 1/4 W	01121	CB1845	5	R1042
A11R25	RESISTOR, COMP: 5.6 kΩ ±5%, 1/4 W	01121	CB5625	7	R0821
A11R26	RESISTOR, COMP: 5.6 kΩ ±5%, 1/4 W	01121	CB5625	7	R0821
A11R27	RESISTOR, COMP: 27 kΩ ±5%, 1/4 W	01121	CB5135	4	R0842
A11R28	RESISTOR, COMP: 3.3 kΩ ±5%, 1/4 W	01121	CB3325	12	R0742
A11R29	RESISTOR, COMP: 1.2 kΩ ±5%, 1/4 W	01121	CB1225	1	R0809
A11R30	RESISTOR, COMP: 39 kΩ ±5%, 1/4 W	01121	CB3935	4	R0748
A11R31	RESISTOR, COMP: 27 kΩ ±5%, 1/4 W	01121	CB5135	4	R0842
A11R32	RESISTOR, COMP: 39 kΩ ±5%, 1/4 W	01121	CB3935	4	R0748

REPLACEABLE PARTS LIST

Equipment/Assembly Designation A11, DIGITAL COUNT AND CONTROL #037208-4-1 (Cont'd)

(1) Reference Designation	(2) Name of Component and Description	(3) Mfr's Code	(4) Manufacturer's Part Number	(5) No. Times Used	(6) Remarks/ SD Stock No.
A11R33	RESISTOR, COMP: 27 kΩ ±5%, 1/4 W	01121	CB5135	4	R0842
A11R34	RESISTOR, COMP: 39 kΩ ±5%, 1/4 W	01121	CB3935	4	R0748
A11R35	RESISTOR, COMP: 3.3 kΩ ±5%, 1/4 W	01121	CB3325	12	R0742
A11R36	RESISTOR, COMP: 3.3 kΩ ±5%, 1/4 W	01121	CB3325	12	R0742
A11R37	RESISTOR, COMP: 47 Ω ±5%, 1/4 W	01121	CB4705	2	R0743
A11R38	RESISTOR, COMP: 27 kΩ ±5%, 1/4 W	01121	CB5135	4	R0842
A11R39	RESISTOR, COMP: 39 kΩ ±5%, 1/4 W	01121	CB3935	4	R0748
A11R40	RESISTOR, COMP: 47 Ω ±5%, 1/4 W	01121	CB4705	2	R0743
A11R41	RESISTOR, COMP: 820 Ω ±5%, 1/4 W	01121	CB8215	1	R0762
A11R42	RESISTOR, COMP: 680 Ω ±5%, 1/4 W	01121	CB6815	6	R1234
A11R43	RESISTOR, COMP: 680 Ω ±5%, 1/4 W	01121	CB6815	6	R1234
A11R44	RESISTOR, COMP: 3.3 kΩ ±5%, 1/4 W	01121	CB3325	12	R0742
A11R45	RESISTOR, COMP: 3.3 kΩ ±5%, 1/4 W	01121	CB3325	12	R0742

REPLACEABLE PARTS LIST

Equipment/Assembly Designation A11, DIGITAL COUNT AND CONTROL #037208-4-1 (Cont'd)

(1) Reference Designation	(2) Name of Component and Description	(3) Mfr's Code	(4) Manufacturer's Part Number	(5) No. Times Used	(6) Remarks/ SD Stock No.
A11R46	RESISTOR, COMP: 560 Ω ±5%, 1/4 W	01121	CB5615	3	R0819
A11R47	RESISTOR, COMP: 560 Ω ±5%, 1/4 W	01121	CB5615	3	R0819
A11R48	RESISTOR, COMP: 470 Ω ±5%, 1/4 W	01121	CB4715	5	R1044
A11R49	RESISTOR, COMP: 680 Ω ±5%, 1/4 W	01121	CB6815	6	R1234
A11R50	RESISTOR, COMP: 560 Ω ±5%, 1/4 W	01121	CB5615	3	R0819
A11R51	RESISTOR, COMP: 3.3 kΩ ±5%, 1/4 W	01121	CB3325	12	R0742
A11R52	RESISTOR, COMP: 6.8 kΩ ±5%, 1/4 W	01121	CB6825	1	R0696
A11R53	RESISTOR, COMP: 100 kΩ ±5%, 1/4 W	01121	CB1045	1	R0741
A11R54	RESISTOR, COMP: 680 Ω ±5%, 1/4 W	01121	CB6815	6	R1234
A11R55	RESISTOR, COMP: 680 Ω ±5%, 1/4 W	01121	CB6815	6	R1234
A11R56	RESISTOR, COMP: 22kΩ ±5%, 1/4 W	01121	CB2235	1	R0768
A11R57	RESISTOR, COMP: 3.3 kΩ ±5%, 1/4 W	01121	CB3325	12	R0742
A11R58	RESISTOR, COMP: 1.8 kΩ ±5%, 1/4 W	01121	CB1825	1	R0959

REPLACEABLE PARTS LIST

Equipment/Assembly Designation A11, DIGITAL COUNT AND CONTROL #037208-4-1 (Cont'd)

(1) Reference Designation	(2) Name of Component and Description	(3) Mfr's Code	(4) Manufacturer's Part Number	(5) No. Times Used	(6) Remarks/ SD Stock No.
A11R59	RESISTOR, COMP: 1.5 kΩ ±5%, 1/4 W	01121	CB1525	3	R0783
A11R60	Not used				
A11R61	RESISTOR, COMP: 1.5 kΩ ±5%, 1/4 W	01121	CB1525	3	R0783
A11R62	RESISTOR, COMP: 1.5 kΩ ±5%, 1/4 W	01121	CB1525	3	R0783
A11R63	RESISTOR, COMP: 680 Ω ±5%, 1/4 W	01121	CB6815	6	R1234
A11R64	RESISTOR, COMP: 10 kΩ ±5%, 1/4 W	01121	CB1035	6	R0766
A11R65	RESISTOR, COMP: 3.3 kΩ ±5%, 1/4 W	01121	CB3325	12	R0742
A11R66	RESISTOR, COMP: 5.6 kΩ ±5%, 1/4 W	01121	CB5625	7	R0821
A11R67	RESISTOR, COMP: 470 Ω ±5%, 1/4 W	01121	CB4715	5	R1044
A11R68	RESISTOR, COMP: 3.3 kΩ ±5%, 1/4 W	01121	CB3325	12	R0742
A11R69	RESISTOR, COMP: 10 kΩ ±5%, 1/4 W	01121	CB1035	6	R0766
A11R70	RESISTOR, COMP: 3.3 kΩ ±5%, 1/4 W	01121	CB3325	12	R0742
A11R71	RESISTOR, COMP: 470 Ω ±5%, 1/4 W	01121	CB4715	5	R1044
A11R72	RESISTOR, COMP: 470 Ω ±5%, 1/4 W	01121	CB4715	5	R1044

REPLACEABLE PARTS LIST

Equipment/Assembly Designation A11, DIGITAL COUNT AND CONTROL #037208-4-1 (Cont'd)

(1) Reference Designation	(2) Name of Component and Description	(3) Mfr's Code	(4) Manufacturer's Part Number	(5) No. Times Used	(6) Remarks/ SD Stock No.
A11R73	RESISTOR, COMP: 3.3 kΩ ±5%, 1/4 W	01121	CB3325	12	R0742
A11R74	RESISTOR, COMP: 10 kΩ ±5%, 1/4 W	01121	CB1035	6	R0766
A11R75	RESISTOR, COMP: 3.3 kΩ ±5%, 1/4 W	01121	CB3325	12	R0742
A11R76	RESISTOR, COMP: 5.6 kΩ ±5%, 1/4 W	01121	CB5625	7	R0821
A11R77	RESISTOR, COMP: 10 kΩ ±5%, 1/4 W	01121	CB1035	6	R0766
A11R78	RESISTOR, COMP: 68 kΩ ±5%, 1/4 W	01121	CB6835	1	R0891
A11R79	RESISTOR, COMP: 330 kΩ ±5%, 1/2	01121	EB2245	1	R0324
A11R80	RESISTOR, COMP: 27 kΩ ±5%, 1 W	01121	GB2735	1	R0324
A11R81	RESISTOR, COMP: 5.6 kΩ ±5%, 1/4 W	01121	CB5625	7	R0821
A11R82	RESISTOR, COMP: 470 Ω ±5%, 1/4 W	01121	CB4715	5	R1044
A11U1	INTEGRATED CIRCUIT: BCD to decimal decoder/driver, TTL	01295	SN74141N	5	025730
A11U2	INTEGRATED CIRCUIT: BCD to decimal decoder/driver, TTL	01295	SN74141N	5	025730
A11U3	INTEGRATED CIRCUIT: BCD to decimal decoder/driver, TTL	01295	SN74141N	5	025730

REPLACEABLE PARTS LIST

Equipment/Assembly Designation A11, DIGITAL COUNT AND CONTROL #037208-4-1 (Cont'd)

(1) Reference Designation	(2) Name of Component and Description	(3) Mfr's Code	(4) Manufacturer's Part Number	(5) No. Times Used	(6) Remarks/ SD Stock No.
A11U4	INTEGRATED CIRCUIT: BCD to decimal decoder/driver, TTL	01295	SN74141N	5	025730
A11U5	INTEGRATED CIRCUIT: BCD to decimal decoder/driver, TTL	01295	SN74141N	5	025730
A11U6	INTEGRATED CIRCUIT: Quad latch, TTL	01295	SN7475N	5	019710
A11U7	INTEGRATED CIRCUIT: Quad latch, TTL	01295	SN7475N	5	019710
A11U8	INTEGRATED CIRCUIT: Quad latch, TTL	01295	SN7475N	5	019710
A11U9	INTEGRATED CIRCUIT: Quad latch, TTL	01295	SN7475N	5	019710
A11U10	INTEGRATED CIRCUIT: Quad latch, TTL	01295	SN7475N	5	019710
A11U11	INTEGRATED CIRCUIT: Dual J-K flip-flop, TTL	01295	SN7473N	3	019709
A11U12	INTEGRATED CIRCUIT: Decade counter, TTL	01295	SN7490N	5	025732
A11U13	INTEGRATED CIRCUIT: Decade counter, TTL	01295	SN7490N	5	025732
A11U14	INTEGRATED CIRCUIT: Decade counter, TTL	01295	SN7490N	5	025732
A11U15	INTEGRATED CIRCUIT: Decade counter, TTL	01295	SN7490N	5	025732
A11U16	INTEGRATED CIRCUIT: Decade counter, TTL	01295	SN7490N	5	025732

REPLACEABLE PARTS LIST

Equipment/Assembly Designation A11, DIGITAL COUNT AND CONTROL #037208-4-1 (Cont'd)

(1) Reference Designation	(2) Name of Component and Description	(3) Mfr's Code	(4) Manufacturer's Part Number	(5) No. Times Used	(6) Remarks/ SD Stock No.
A11U17	INTEGRATED CIRCUIT: Dual J-K flip-flop, TTL	01295	SN7473N	3	019709
A11U18	INTEGRATED CIRCUIT: Dual J-K flip-flop, TTL	01295	SN7473N	3	019709
A11U19	INTEGRATED CIRCUIT: Quad 2-input NAND gate, TTL	01295	SN7400N	6	019705
A11U20	INTEGRATED CIRCUIT: Quad 2-input NAND gate, TTL	01295	SN7400N	6	019705
A11U21	INTEGRATED CIRCUIT: One-shot multivibrator, TTL	01295	SN74121N	1	025760
A11U22	INTEGRATED CIRCUIT: Quad 2-input NAND gate, TTL	01295	SN7400N	6	019705
A11U23	INTEGRATED CIRCUIT: Quad 2-input NAND gate, TTL	01295	SN7400N	6	019705
A11U24	INTEGRATED CIRCUIT: Dual 4-input NAND gate, TTL	01295	SN7420N	2	025713
A11U25	INTEGRATED CIRCUIT: Hex inverter, TTL	01295	SN7404N	1	025779
A11U26	INTEGRATED CIRCUIT: J-K, M-S flip-flop, TTL	01295	SN7472N	1	019967
A11U27	INTEGRATED CIRCUIT: Triple 3-input NAND gate, TTL	01295	SN7410N	2	019706
A11U28	INTEGRATED CIRCUIT: Dual 4-input NAND gate, TTL	01295	SN7420N	2	025713
A11U29	INTEGRATED CIRCUIT: Quad 2-input NAND gate, TTL	01295	SN7400N	6	019705

REPLACEABLE PARTS LIST

Equipment/Assembly Designation A11, DIGITAL COUNT AND CONTROL #037208-4-1 (Cont'd)

(1) Reference Designation	(2) Name of Component and Description	(3) Mfr's Code	(4) Manufacturer's Part Number	(5) No. Times Used	(6) Remarks/ SD Stock No.
A11U30	INTEGRATED CIRCUIT: Quad 2-input NAND gate, TTL	01295	SN7400N	6	019705
A11U31	INTEGRATED CIRCUIT: 8-input NAND gate, TTL	01295	SN7430N	1	025726
A11U32	INTEGRATED CIRCUIT: Dual 4-input NAND gate, TTL	01295	SN7410N	1	025713
A11U33	INTEGRATED CIRCUIT: Quad 2-input NOR gate, TTL	01295	SN7402N	3	025709
A11U34	INTEGRATED CIRCUIT: 4-10 line decoder/driver, TTL	01295	SN74145	1	025754
A11U35	INTEGRATED CIRCUIT: Up/down binary counter, TTL	01295	SN74193N	1	025763
A11U36	INTEGRATED CIRCUIT: Quad 2-input NOR gate, TTL	01295	SN7402N	3	025709
A11U37	INTEGRATED CIRCUIT: Quad 2-input NOR gate, TTL	01295	SN7402N	3	025709
A11V1	TUBE, READOUT	06811	V0132	6	V0132
A11V2	TUBE, READOUT	06811	V0132	6	V0132
A11V3	TUBE, READOUT	06811	V0132	6	V0132
A11V4	TUBE, READOUT	06811	V0132	6	V0132
A11V5	TUBE, READOUT	06811	V0132	6	V0132
A11V6	TUBE, READOUT	06811	V0132	6	V0132
A11V7	TUBE, READOUT	06811	V0133	1	V0133
	SOCKET, READOUT: 14-pin, P.C. mt. for NL-950	83781	RTS-44	7	X0179

REPLACEABLE PARTS LIST

Equipment/Assembly Designation A11, DIGITAL COUNT AND CONTROL #037208-4-1 (Cont'd)

(1) Reference Designation	(2) Name of Component and Description	(3) Mfr's Code	(4) Manufacturer's Part Number	(5) No. Times Used	(6) Remarks/ SD Stock No.
	SOCKET, INTEGRATED CIRCUIT: 8-terminal strip	27264	1938-4B-8	10	X0185
	INSULATOR: 8-hole	06811	039466-3	10	039466-3
	ASSEMBLY, LEFT HAND ANNUNCIATOR	06811	037283-4-1	1	037283-4-1
	ASSEMBLY, RIGHT HAND ANNUNCIATOR	06811	037280-4-1	1	037280-4-1
	WIRE LIST	06811	037208-5-1	1	037208-5-1
	TERMINAL: Swage bifurcated	88245	2000B	40	E0100
	LUG, SOLDER: #10	79963	622-.196	2	E0120
	RIVET, SEMITUBULAR: 1/8 X 1/8	12014	R-3472 X 1/8 Nickel	2	H0404
	NUT, FLOATING: 4-40 locking	22599	22A27M-22-40	2	61039110
	RIVET, SEMITUBULAR: 1/16 X 9/64	84841	500X9/64 NI BRS	4	H2058
	SCREW, PAN HEAD MACHINE: 4-40 X 5-16	MIL	MS51957-14	2	H1273
	WASHER: #4 flat head	MIL	MS15795-803	2	H0758
	TIE, ANCHOR	06383	TM1S6	2	37021790
	TIE, CABLE: Nylon	06383	SST1M	2	H1104

CIRCUIT DESCRIPTION
A12, SWITCH
SCHEMATIC #037212-7-1

The A12 Switch board, provides logic circuits for manually and remotely selecting the proper FUNCTION and RANGE. The front-panel-selected operating modes are switched by control lines A12J1 from either front panel pushbutton switch closure for pin grounding on remote connector A12J2. Both the digital and analog circuitry are set-up with this Switch board. Control lines from the A12J1 connector activate the A11 Digital Count and Control circuitry in the digital section and lines from A12Q1 through A12Q9 activate A1, Guarded Control circuitry in the analog section.

To select a FUNCTION, one or more of the Front panel FUNCTION pushbutton switches, A12S48 through A12S54, is depressed. Similarly, RANGE selection involves depressing one of the front panel RANGE pushbutton switches, A12S40 through A12S47. To explain the Switch board, one RANGE & FUNCTION Switch selection will be used. For instance, selecting the .1 RANGE and the VDC FUNCTION closes switches A12S48 and A12S42 respectively. The A12S48 switch closure places a low on the following pins: 12 of A12J1, J of A12J2, 6 of A12U1, 2 of A12U3, 8 of A12U4, and 8 of A12U14. Also, the A12S42 switch closure places a low on the following pins: 5 of A12U1, 3 of A12U1, 9 of A12U1, and 5 of A12U2. With these pins low, a number of elements change state: The lows on pins 5 and 6 of A12U1 place a high on pin 4 of A12U1. The high is inverted by A12U6 with a resultant low on pin 10 of A12U6. Pin 21 of A12J1 is now low which makes pin 21 of A11J1 also low. With a low on its base, A11Q5 is turned on lighting the incandescent lamp A11DS4, mVDC. The high on pin 4 of A12U1 is also inverted by A12U7 which places a low on pin 15 of A12J1. Pin 15 of A11J1 is now low, turning transistor, A11Q7, on and lighting the decimal point of readout tube A11V3.

A low also appears on pin 9 of A12U14 for the following reasons: The BAD RANGE is high so pin 10 of A12U16 is low which places a low on pin 11 of A12U16. The TEST line is low so pin 12 of A12U16 is low; thus, pin 13 of A12U16 is high, making pin 4 of A12U13 and pin 9 of A12U14 low.

With pin 8 and 9 of A12U14 now low, pin 10 goes high, turning on transistor A12Q1 which activates coil L4. L4 closes reed switch A1S4 on the A1, Guard board. This grounds pin 18 of A1 and pin 9&W of A3. Thus, coil A3L19 is activated, closing switch A3S19, which selects the proper negative feedback resistance value for the A3A1 Input Operational amplifier.

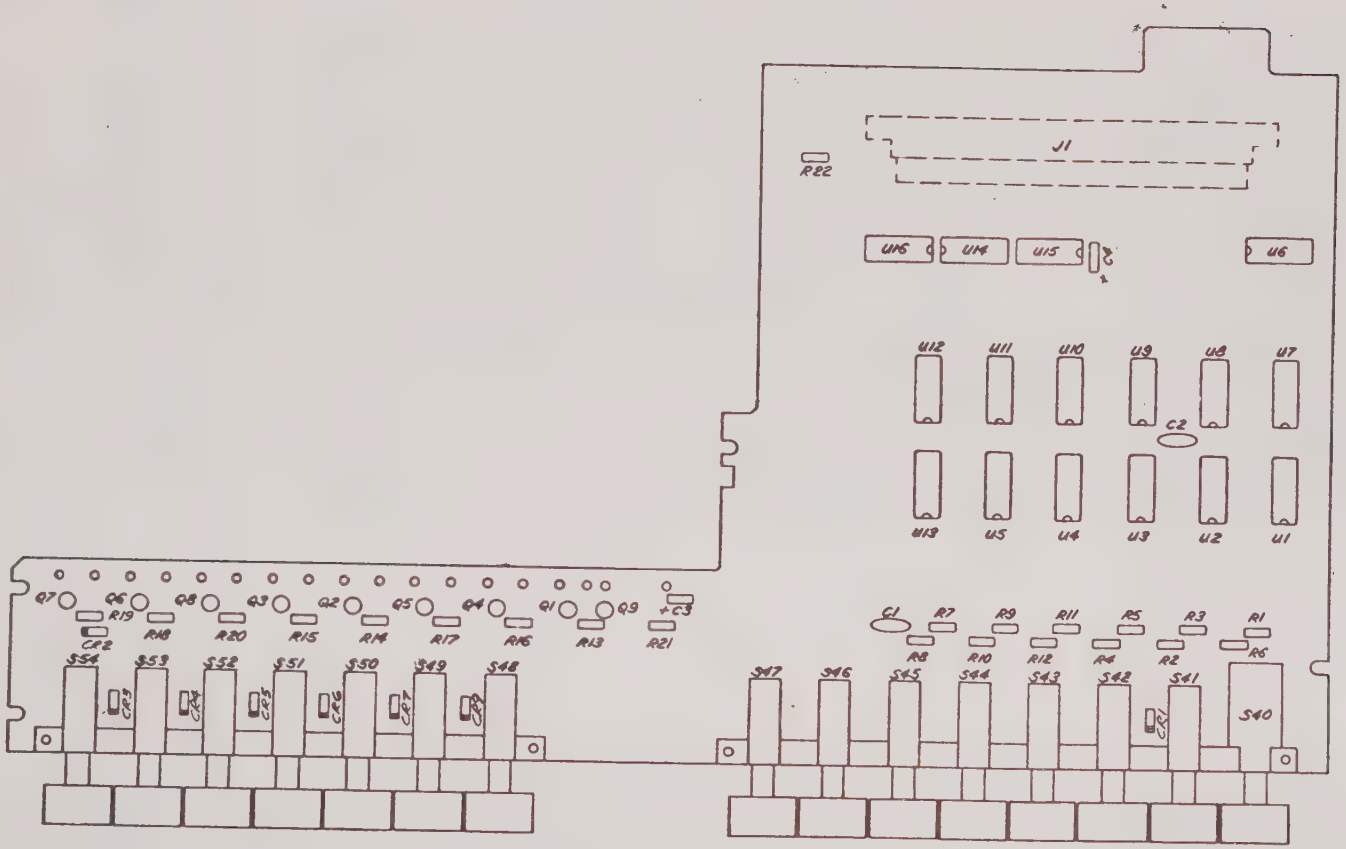

A12, SWITCH ASSEMBLY #037212-4-1 REV B

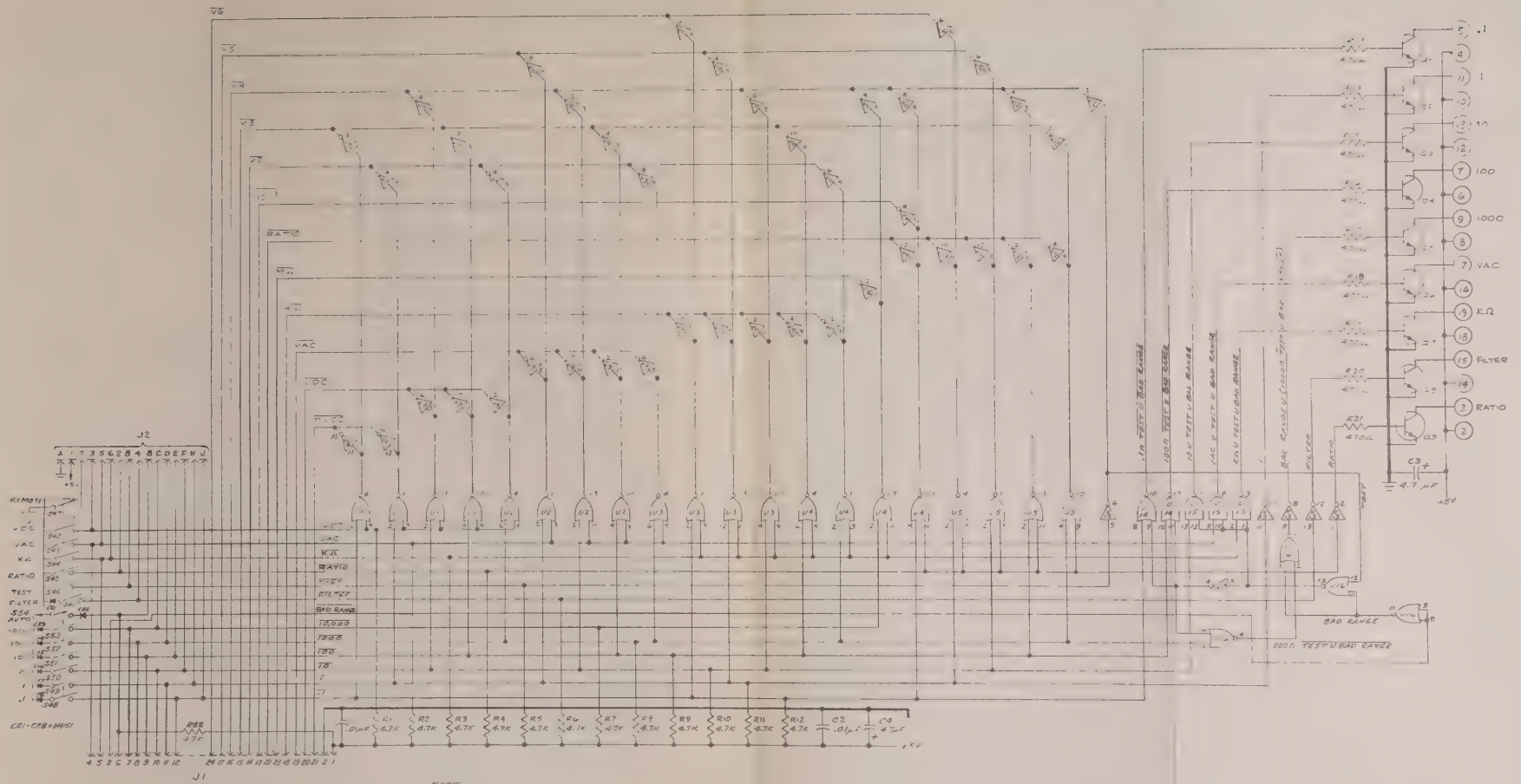

A12, SWITCH
SCHEMATIC #037212-7-1 REV A

REPLACEABLE PARTS LIST

Equipment/Assembly Designation A12, SWITCH ASSEMBLY #037212-4-1

(1) Reference Designation	(2) Name of Component and Description	(3) Mfr's Code	(4) Manufacturer's Part Number	(5) No. Times Used	(6) Remarks/ SD Stock No.
	P.C. BOARD, SWITCH ASSEMBLY	06811	037212-1-1	1	037212-1-1
A12C1	CAPACITOR, CERAMIC: .01 µF +80-20%, 100 Vdcw	91418	TA110	2	C0556
A12C2	CAPACITOR, CERAMIC: .01 µF +80-20%, 100 Vdcw	91418	TA110	2	C0556
A12C3	CAPACITOR, TANT: 4.7 µF ±10%, 10 Vdcw	56289	150D475X9010A2	2	C1011
A12C4	CAPACITOR, TANT: 4.7 µF ±10%, 10 Vdcw	56289	150D475X9010A2	2	C1011
A12CR1	SEMICONDUCTOR DEVICE, DIODE: Silicon, 50 Vdcw, 150 mA	03508	1N4151	8	CR0150
A12CR2	SEMICONDUCTOR DEVICE, DIODE: Silicon, 50 Vdcw, 150 mA	03508	1N4151	8	CR0150
A12CR3	SEMICONDUCTOR DEVICE, DIODE: Silicon, 50 Vdcw, 150 mA	03508	1N4151	8	CR0150
A12CR4	SEMICONDUCTOR DEVICE, DIODE: Silicon, 50 Vdcw, 150 mA	03508	1N4151	8	CR0150
A12CR5	SEMICONDUCTOR DEVICE, DIODE: Silicon, 50 Vdcw, 150 mA	03508	1N4151	8	CR0150
A12CR6	SEMICONDUCTOR DEVICE, DIODE: Silicon, 50 Vdcw, 150 mA	03508	1N4151	8	CR0150
A12CR7	SEMICONDUCTOR DEVICE, DIODE: Silicon, 50 Vdcw, 150 mA	03508	1N4151	8	CR0150
A12CR8	SEMICONDUCTOR DEVICE, DIODE: Silicon, 50 Vdcw, 150 mA	03508	1N4151	8	CR0150

REPLACEABLE PARTS LIST

Equipment/Assembly Designation A12, SWITCH ASSEMBLY #037212-4-1 (Cont'd)

(1) Reference Designation	(2) Name of Component and Description	(3) Mfr's Code	(4) Manufacturer's Part Number	(5) No. Times Used	(6) Remarks/ SD Stock No.
A12Q1	SEMICONDUCTOR DEVICE, TRANSISTOR: Silicon, NPN	07263	2N3646	9	Q0218
A12Q2	SEMICONDUCTOR DEVICE, TRANSISTOR: Silicon, NPN	07263	2N3646	9	Q0218
A12Q3	SEMICONDUCTOR DEVICE, TRANSISTOR: Silicon, NPN	07263	2N3646	9	Q0218
A12Q4	SEMICONDUCTOR DEVICE, TRANSISTOR: Silicon, NPN	07263	2N3646	9	Q0218
A12Q5	SEMICONDUCTOR DEVICE, TRANSISTOR: Silicon, NPN	07263	2N3646	9	Q0218
A12Q6	SEMICONDUCTOR DEVICE, TRANSISTOR: Silicon, NPN	07263	2N3646	9	Q0218
A12Q7	SEMICONDUCTOR DEVICE, TRANSISTOR: Silicon, NPN	07263	2N3646	9	Q0218
A12Q8	SEMICONDUCTOR DEVICE, TRANSISTOR: Silicon, NPN	07263	2N3646	9	Q0218
A12Q9	SEMICONDUCTOR DEVICE, TRANSISTOR: Silicon, NPN	07263	2N3646	9	Q0218
A12R1	RESISTOR, COMP: 4.7 kΩ ±5%, 1/4 W	01121	CB4725	13	R0892
A12R2	RESISTOR, COMP: 4.7 kΩ ±5%, 1/4 W	01121	CB4725	13	R0892
A12R3	RESISTOR, COMP: 4.7 kΩ ±5%, 1/4 W	01121	CB4725	13	R0892
A12R4	RESISTOR, COMP: 4.7 kΩ ±5%, 1/4 W	01121	CB4725	13	R0892

REPLACEABLE PARTS LIST

Equipment/Assembly Designation A12, SWITCH ASSEMBLY #037212-4-1 (Cont'd)

(1) Reference Designation	(2) Name of Component and Description	(3) Mfr's Code	(4) Manufacturer's Part Number	(5) No. Times Used	(6) Remarks/ SD Stock No.
A12R5	RESISTOR, COMP: 4.7Ω ±5%, 1/4 W	01121	CB4725	13	R0892
A12R6	RESISTOR, COMP: 4.7Ω ±5%, 1/4 W	01121	CB4725	13	R0892
A12R7	RESISTOR, COMP: 4.7Ω ±5%, 1/4 W	01121	CB4725	13	R0892
A12R8	RESISTOR, COMP: 4.7Ω ±5%, 1/4 W	01121	CB4725	13	R0892
A12R9	RESISTOR, COMP: 4.7Ω ±5%, 1/4 W	01121	CB4725	13	R0892
A12R10	RESISTOR, COMP: 4.7Ω ±5%, 1/4 W	01121	CB4725	13	R0892
A12R11	RESISTOR, COMP: 4.7Ω ±5%, 1/4 W	01121	CB4725	13	R0892
A12R12	RESISTOR, COMP: 4.7Ω ±5%, 1/4 W	01121	CB4725	13	R0892
A12R13	RESISTOR, COMP: 470 Ω ±5%, 1/4 W	01121	CB4715	9	R1044
A12R14	RESISTOR, COMP: 470 Ω ±5%, 1/4 W	01121	CB4715	9	R1044
A12R15	RESISTOR, COMP: 470 Ω ±5%, 1/4 W	01121	CB4715	9	R1044
A12R16	RESISTOR, COMP: 470 Ω ±5%, 1/4 W	01121	CB4715	9	R1044
A12R17	RESISTOR, COMP: 470 Ω ±5%, 1/4 W	01121	CB4715	9	R1044

REPLACEABLE PARTS LIST

Equipment/Assembly Designation A12, SWITCH ASSEMBLY #037212-4-1 (Cont'd)

(1) Reference Designation	(2) Name of Component and Description	(3) Mfr's Code	(4) Manufacturer's Part Number	(5) No. Times Used	(6) Remarks/ SD Stock No.
A12R18	RESISTOR, COMP: 470 Ω ±5%, 1/4 W	01121	CB4715	9	R1044
A12R19	RESISTOR, COMP: 470 Ω ±5%, 1/4 W	01121	CB4715	9	R1044
A12R20	RESISTOR, COMP: 470 Ω ±5%, 1/4 W	01121	CB4715	9	R1044
A12R21	RESISTOR, COMP: 470 Ω ±5%, 1/4 W	01121	CB4715	9	R1044
A12R22	RESISTOR, COMP: 4.7 kΩ ±5%, 1/4 W	01121	CB4725	13	R0892
A12U1	INTEGRATED CIRCUIT: Quad 2-input NOR gate, TTL	01295	SN7402N	7	025709
A12U2	INTEGRATED CIRCUIT: Quad 2-input NOR gate, TTL	01295	SN7402N	7	025709
A12U3	INTEGRATED CIRCUIT: Quad 2-input NOR gate, TTL	01295	SN7402N	7	025709
A12U4	INTEGRATED CIRCUIT: Quad 2-input NOR gate, TTL	01295	SN7402N	7	025709
A12U5	INTEGRATED CIRCUIT: Quad 2-input NOR gate, TTL	01295	SN7402N	7	025709
A12U6	INTEGRATED CIRCUIT: Hex inverter, 2 kΩ pull-ups, DTL	01295	SN15837N	1	025738
A12U7	INTEGRATED CIRCUIT: Hex inverter, 6 kΩ pull-ups, DTL	04713	MC836P	6	025704
A12U8	INTEGRATED CIRCUIT: Hex inverter, 6 kΩ pull-ups, DTL	04713	MC836P	6	025704

REPLACEABLE PARTS LIST

Equipment/Assembly Designation A12, SWITCH ASSEMBLY #037212-4-1 (Cont'd)

(1) Reference Designation	(2) Name of Component and Description	(3) Mfr's Code	(4) Manufacturer's Part Number	(5) No. Times Used	(6) Remarks/ SD Stock No.
A12U9	INTEGRATED CIRCUIT: Hex inverter, 6 kΩ pull-ups, DTL	04713	MC836P	6	025704
A12U10	INTEGRATED CIRCUIT: Hex inverter, 6 kΩ pull-ups, DTL	04713	MC836P	6	025704
A12U11	INTEGRATED CIRCUIT: Hex inverter, 6 kΩ pull-ups, DTL	04713	MC836P	6	025704
A12U12	INTEGRATED CIRCUIT: Hex inverter, 6 kΩ pull-ups, DTL	04713	MC836P	6	025704
A12U13	INTEGRATED CIRCUIT: Hex inverter, TTL	01295	SN7404N	1	025779
A12U14	INTEGRATED CIRCUIT: Quad 2-input NOR gate, TTL	01295	SN7402N	7	025709
A12U15	INTEGRATED CIRCUIT: Quad 2-input NAND gate, TTL	01295	SN7400N	1	019705
A12U16	INTEGRATED CIRCUIT: Quad 2-input NOR gate, TTL	01295	SN7402N	7	025709
	ASSEMBLY, PUSHBUTTON SWITCH: 7-station, range	06811	037723	1	037723
	ASSEMBLY, PUSHBUTTON SWITCH: 8-station, function	06811	037722	1	037722
	CONNECTOR, P.C.: 24-pin, 90°, male plug	26742	61-6024-1700-00	1	J0610
	CONNECTOR, P.C.: Single male post, 10-inch	00779	86090-4	18	E0322

CHAPTER 6
OPTIONS AND ACCESSORIES

6.1 INTRODUCTION

This chapter contains descriptions of the standard options and accessories available for the Model 7110A DMM. Special options will be included at the end of this chapter when applicable.

6.2 STANDARD OPTIONS

Each option, with a few exceptions, contains a description, assembly, schematic, and a parts list:

TABLE 6.1 OPTION DRAWING INDEX

Option	Description	Drawing	Page #
Opt 01	50 Hz Line Operation Assembly	037234-4-1	OPT 01-3
	Parts List	037234-4-1	OPT 01-4
Opt 02	A9, AC Converter Assembly	037196-4-1	OPT 02-2
	Schematic	037196-7-1	OPT 02-3
	Parts List	037196-4-1	OPT 02-4
Opt 03	A7, Ohms Current Source Ass'y	037192-4-1	OPT 03-3
	Schematic	037192-7-1	OPT 03-4
	Parts List	037192-4-1	OPT 03-5
	A7A1, RVL-3 Assembly	037290-4-1	OPT 03-9
	Schematic	037290-7-1	OPT 03-10
	Parts List	037290-4-1	OPT 03-11
	A7A3, Resistor Network Ass'y	037183-4-1	OPT 03-13
	Parts List	037183-4-1	OPT 03-14
Opt 05	A14, Connector BCD Assembly	037221-4-1	OPT 05-2
	Parts List	037221-4-1	OPT 05-3
	Assembly	037220-4-1	OPT 05-4
	Schematic	037220-7-1	OPT 05-5
	Parts List	037220-4-1	OPT 05-6
Opt 06	Remote Control Assembly	037226-4-1	OPT 06-2
	Schematic	037226-7-1	OPT 06-3
	Parts List	037226-4-1	OPT 06-4
Opt 08	Rear Input Assembly	037181-4-1	OPT 08-2
	Parts List	037181-4-1	OPT 08-3
Opt 10	Guard/Calibration Cover Ass'y	037732	OPT 10-3
	Parts List	037734	OPT 10-4
Opt 10	A9, AC Converter Assembly	0364201	OPT 10-5
	Schematic	7-03764201	OPT 10-6
	Parts List	03764201	OPT 10-7
	RMS to DC Converter Mod. Ass'y	037730	OPT 10-11
Opt 301,2	Remote Program Assembly	037483-4-1	OPT 301,2-2
	Parts List	037483-4-1	OPT 301,2-3
	A17, Remote Program Assembly	037479-4-1	OPT 301,2-4
	Schematic	037479-7-1	OPT 301,2-5

TABLE 6.1 OPTION DRAWING INDEX (Cont'd)

Option	Description	Drawing	Page #
Opt 301,2	A17, Remote Program (Cont'd)		
	Assembly	037482-4-1	OPT 301,2-6
	Parts List	037479-4-1	OPT 301,2-7
Opt 303	A13, A14, Remote Programming		OPT 301-1
Opt 304	Inverted BCD		OPT 304-2
Opt 305	A13, BCD 4-2-2-1 Output Ass'y	037216-4-1	OPT 305-2
	Schematic	037216-7-1	OPT 305-3
	Parts List	037216-4-1	OPT 305-4
	A14, BCD Connector Assembly	037240-4-1	OPT 305-6
	Schematic	037240-7-1	OPT 305-7
	Parts List	037240-4-1	OPT 305-8

6.3 STANDARD ACCESSORIES

The following accessories are available for the Model 7110A:

TABLE 6.2 ACCESSORIES

Description	Drawing	Page #
100/200 VAC Modification Assembly	037550-4-1	ACC-2
Parts List	037550-4-1	ACC-3
Cable, Model 7110A to HP 5050B		
Assembly	037528-4-1	ACC-4
Schematic	037528-7-1	ACC-5
Parts List	037528-4-1	ACC-6
P.C. Board Extender Assembly	037494	ACC-7
Parts List	037494	ACC-8
3-1/2" Full Rack Assembly	039986	ACC-9
Parts List	039986	ACC-10

See Chapter 5, Page 5-4 for parts list explanation and Chapter 7, Appendix A for the Manufacturer's Index.

CIRCUIT DESCRIPTION
OPTION 01, 50 Hz LINE OPERATION
FINAL ASSEMBLY #037234-4-1

With Option 01 installed, the Model 7110A DMM will operate on 50 Hz line input. The modification includes substituting a 5 MHz crystal for the 6 MHz crystal, Y1, on the A5 Analog to Digital Control Logic P.C. board; and removing jumpers 10 and 12 and installing jumpers 11 and 13 on the A11, Digital Count and Control P.C. board.

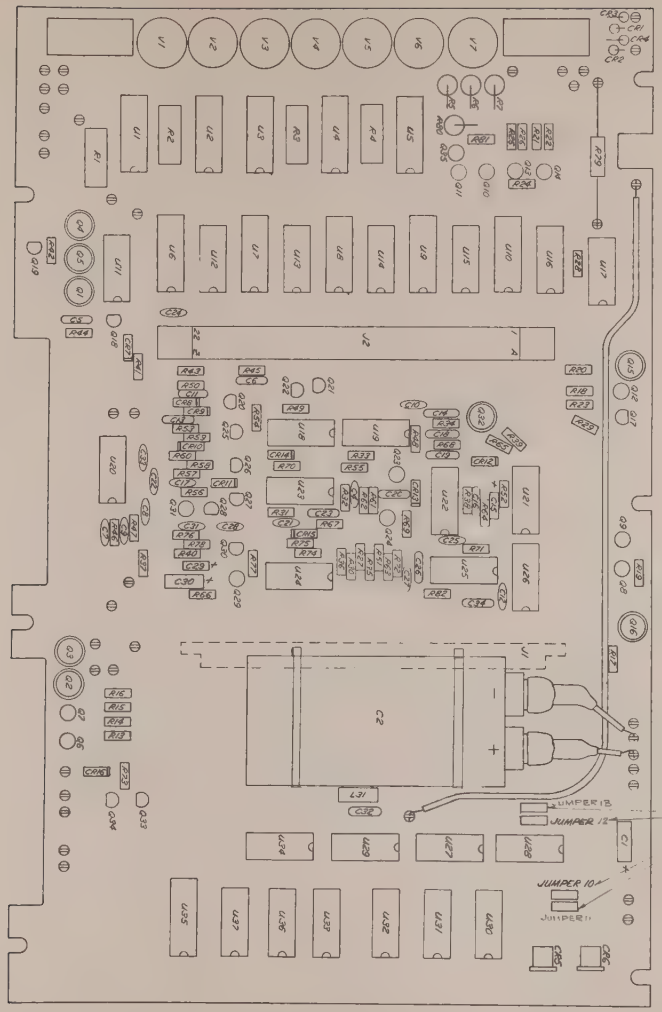

DIGITAL MOTHER PC ASSY
A11

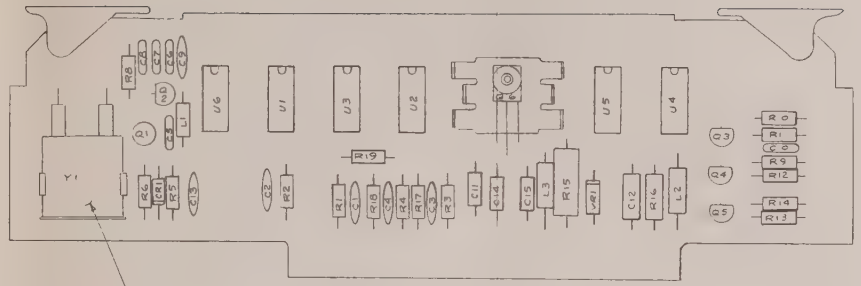

A/D PC ASSY A5

NOTES:
1/ REMOVE TOP COVER FROM UNIT IF INSTALLED
2/ MODIFY A5 & A11 AS SHOWN
3/ REPLACE TOP COVER
4/ CHANGE UNIT REAR PANEL LABEL TO 01 OPT 50HZ

OPTION 01, 50 Hz LINE OPERATION
ASSEMBLY #037234-4-1 REV A

REPLACEABLE PARTS LIST

Equipment/Assembly Designation OPT 01, 50 Hz ASSEMBLY #037234-4-1

(1) Reference Designation		(2) Name of Component and Description	(3) Mfr's Code	(4) Manufacturer's Part Number	(5) No. Times Used	(6) Remarks/ SD Stock No.
ITEM	REF					
1		ASSEMBLY, 50 Hz	06811	037234-4-1		037234-4-1
2		ASSEMBLY, FINAL CHASSIS	06811	037237-4-1	1	037237-4-1
3	Y1	CRYSTAL: 5.0 MHz, 32 pF	00809	C018	1	Y0052
4		JUMPER	06811	W0082	2	W0082
10	Y1	CRYSTAL - DELETE	00809	A061FFG32	1	Y0051

CIRCUIT DESCRIPTION
OPTION 02, A9, AC CONVERTER
SCHEMATIC #037196-7-1

The A9 AC Converter board changes ac voltage to a proportional dc voltage. The resulting dc voltage is then measured by the multimeter. To accomplish the conversion, the AC Converter board contains an attenuator circuit and an ac-to-dc conversion circuit.

When ac is selected, the HI input connector of the instrument is connected to the input of the AC Converter. For the 10 V, 100 V, or 1000 V ranges, range control signals through diodes A9CR5, A9CR6, or A9CR7 turn on relays and close switches A9S1, A9S2, or A9S3 through a magnetic field generated by A9L1, A9L2, or A9L3. When one of these switches is closed, A9R8 and its associated shunt capacitance is shunted by a resistor-capacitor combination which increases the attenuation in the input by a factor of 10, 100, or 1000. A small variable capacitor is also added in shunt with A9R1 and A9C3 to adjust the high frequency attenuation to obtain a flat frequency response. Elements A9R33, A9R14, A9C1, A9R34, A9R15, and A9C2 are employed to compensate for the variables in the other elements of the attenuator.

A9Q1 and A9Q2 comprise a unity gain amplifier with a high input impedance, a very-light loading on the input attenuator, and a low-output impedance for driving the following stages.

Amplifier A9U2 has negative feedback provided by A9R25, A9R29, and A9C15 with input currents through A9R16 and A9R22. The current through A9R16 is directly proportional to the input voltage. Amplifier A9U1 inverts the input signal and generates negative half-wave rectified signals at the junction of A9CR4 and A9R22. The negative half-wave rectified signal results in a current through A9R22 to the input summing junction of A9U2 which is twice the value of current through A9R16 and opposite in sign. As a result, only negative half-waves of current are effectively fed to A9U2 which amplifies the dc component and filters out much of the ac components through the action of A9C15. The negative dc output voltage is proportional to the full-wave average value of the input voltage and the value of A9R25 and A9R29 is adjusted so that the reading of the DMM is equal to the RMS value of a sine wave.

OPTION 02, A9, AC CONVERTER ASSEMBLY #037196-4-1 REV C

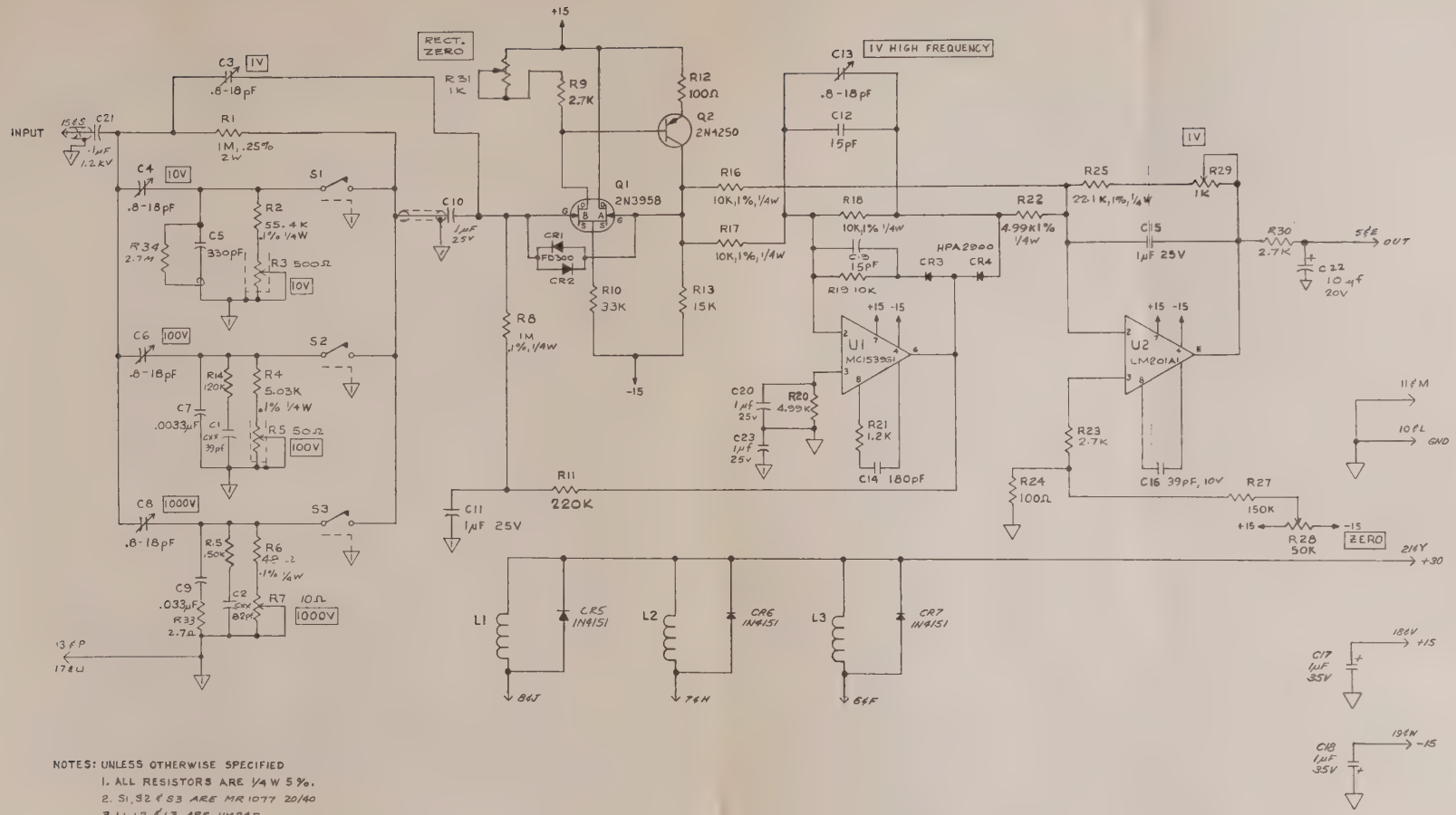

NOTES: UNLESS OTHERWISE SPECIFIED
1. ALL RESISTORS ARE 1/4 W 5%.
2. S1, S2 & S3 ARE MR 1077 20/40
3. L1, L2 & L3 ARE UM 24P

OPTION 02, A9, AC CONVERTER
SCHEMATIC #037196-7-1 REV C

REPLACEABLE PARTS LIST

Equipment/Assembly Designation OPT 02, A9, AC CONVERTER ASSEMBLY #037196-4-1

(1) Reference Designation	(2) Name of Component and Description	(3) Mfr's Code	(4) Manufacturer's Part Number	(5) No. Times Used	(6) Remarks/ SD Stock No.
	P.C. BOARD, AC CONVERTER	06811	037196-1-1	1	037196-1-1
A9C1	CAPACITOR, MICA: 39 pF ±5%, 500 Vdcw, crimp lead	72136	DM15ED390J0	2	C0532
A9C2	CAPACITOR, MICA: 82 pF ±5%, 500 Vdcw, crimp lead	72136	DM15ED820J0	1	C0535
A9C3	CAPACITOR, VARIABLE GLASS: .8-18 pF, P.C. mt.	73899	VC32GW	5	C0555
A9C4	CAPACITOR, VARIABLE GLASS: .8-18 pF, P.C. mt.	73899	VC32GW	5	C0555
A9C5	CAPACITOR, MICA: 330 pF ±5%, 500 Vdcw, crimp lead	72136	DM15FD331J0	1	C0540
A9C6	CAPACITOR, VARIABLE GLASS: .8-18 pF, P.C. mt.	73899	VC32GW	5	C0555
A9C7	CAPACITOR, TEFLON: .0033 µF ±5%, 100 Vdcw	12517	1TA332JSN	1	C1260
A9C8	CAPACITOR, VARIABLE GLASS: .8-18 pF, P.C. mt.	73899	VC32GW	5	C0555
A9C9	CAPACITOR, TEFLON: .033 µF ±5%, 100 Vdcw	12517	1TU333JSN	1	C1256
A9C10	CAPACITOR, CERAMIC: 1 µF ±20%, 25 Vdcw	56289	5C023105X0250B3	5	C0879

REPLACEABLE PARTS LIST

Equipment/Assembly Designation: OPT 02, A9, AC CONVERTER ASSEMBLY #037196-4-1 (Cont'd)

(1) Reference Designation	(2) Name of Component and Description	(3) Mfr's Code	(4) Manufacturer's Part Number	(5) No. Times Used	(6) Remarks/ SD Stock No.
A9C11	CAPACITOR, CERAMIC: 1 µF ±20%, 25 Vdcw	56289	5C023105X0250B3	5	C0879
A9C12	CAPACITOR, MICA: 15 pF ±5%, 500 Vdcw	72136	DM15CD150J0	2	C1142
A9C13	CAPACITOR, VARIABLE GLASS: .8-18 pF, P.C. mt.	73899	VC32GW	5	C0555
A9C14	CAPACITOR, MICA: 180 pf ±5%, 500 Vdcw	72136	DM15FD181J0	1	C1138
A9C15	CAPACITOR, CERAMIC: 1 µF ±20%, 25 Vdcw	56289	5C023105X0250B3	5	C0879
A9C16	CAPACITOR, MICA: 39 pF ±5%, 500 Vdcw, crimp lead	72136	DM15ED390J0	2	C0532
A9C17	CAPACITOR, TANT: 1 µF ±10%, 35 Vdcw	56289	150D105X9035A2	2	C0524
A9C18	CAPACITOR, TANT: 1 µF ±10%, 35 Vdcw	56289	150D105X9035A2	2	C0524
A9C19	CAPACITOR, MICA: 15 pF ±5%, 500 Vdcw	72136	DM15CD150J0	2	C1142
A9C20	CAPACITOR, CERAMIC: 1 µF ±20%, 25 Vdcw	56289	5C023105X0250B3	5	C0879
A9C21	CAPACITOR, METAL MYLAR: .1 µF ±20%, 1.2 kV	12406	ZD12A104	1	03286130
A9C22	CAPACITOR, TANT: 10 µF ±10%, 20 Vdcw	56289	150D106X9020B2	1	C0353
A9C23	CAPACITOR, CERAMIC: 1 µF ±20%, 25 Vdcw	56289	5C023105X0250B3	5	C0879

REPLACEABLE PARTS LIST

Equipment/Assembly Designation OPT 02, A9, AC CONVERTER ASSEMBLY #037196-4-1 (Cont'd)

(1) Reference Designation	(2) Name of Component and Description	(3) Mfr's Code	(4) Manufacturer's Part Number	(5) No. Times Used	(6) Remarks/ SD Stock No.
A9CR1	SEMICONDUCTOR DEVICE, DIODE: 125 Vdcw, high condition	13715	FD300	2	26012320
A9CR2	SEMICONDUCTOR DEVICE, DIODE: 125 Vdcw, high condition	13715	FD300	2	26012320
A9CR3	SEMICONDUCTOR DEVICE, DIODE: 120 ps, 10 Vdcw, ultra-fast switch	28480	5082-2900	2	26015360
A9CR4	SEMICONDUCTOR DEVICE, DIODE: 120 ps, 10 Vdcw, ultra-fast switch	28480	5082-2900	2	26015360
A9CR5	SEMICONDUCTOR DEVICE, DIODE: Silicon, 150 mA, 50 Vdcw	03508	1N4151	3	CR0150
A9CR6	SEMICONDUCTOR DEVICE, DIODE: Silicon, 150 mA, 50 Vdcw	03508	1N4151	3	CR0150
A9CR7	SEMICONDUCTOR DEVICE, DIODE: Silicon, 150 mA, 50 Vdcw	03508	1N4151	3	CR0150
A9L1	COIL, REED: 24 Vdcw	71707	UM-24-P	3	L0175
A9L2	COIL, REED: 24 Vdcw	71707	UM-24-P	3	L0175
A9L3	COIL, REED: 24 Vdcw	71707	UM-24-P	3	L0175
A9Q1	SEMICONDUCTOR DEVICE, TRANSISTOR: Dual, matched JFET, N-Channel	32293	2N3958	1	26015100
A9Q2	SEMICONDUCTOR DEVICE, TRANSISTOR: Silicon, PNP	07263	2N4250	1	26014430
A9R1	RESISTOR, METAL FILM: 1 MΩ ±25%, 2 W, 25 PPM	24223	9850-2A	1	R2714

REPLACEABLE PARTS LIST

Equipment/Assembly Designation OPT 02, A9, AC CONVERTER ASSEMBLY #037196-4-1 (Cont'd)

(1) Reference Designation	(2) Name of Component and Description	(3) Mfr's Code	(4) Manufacturer's Part Number	(5) No. Times Used	(6) Remarks/ SD Stock No.
A9R2	RESISTOR, METAL FILM: 55.4 kΩ ±.1%, 1/4 W, 25 PPM	03888	PME60T9	1	R2532
A9R3	RESISTOR, POTENTIOMETER, CERAMIC: 500 Ω, ±10%, 3/8 W, end adjustment	73138	89PR500	1	R2821
A9R4	RESISTOR, METAL FILM: 5.03 kΩ ±.1%, 1/4 W, 25 PPM	03888	PME60T9	1	R2530
A9R5	RESISTOR, POTENTIOMETER, CERAMIC: 50 Ω ±20%, 3/8 W, 15-turn, end adjust	73138	89PR-50	1	R2822
A9R6	RESISTOR, METAL FILM: 481 Ω ±.1%, 1/4 W, 25 PPM	03888	PME60T9	1	R2864
A9R7	RESISTOR, POTENTIOMETER, CERAMIC: 10 Ω ±20%, 3/8 W, 15-turn, end adjust	73138	89PR10	1	R2786
A9R8	RESISTOR, METAL FILM: 1 MΩ ±.1%, 1/4 W, 25 PPM	03888	PME60T9	1	R2533
A9R9	RESISTOR, COMP: 2.7 kΩ ±5%, 1/4 W	01121	CB2725	3	R0937
A9R10	RESISTOR, COMP: 33 kΩ ±5%, 1/4 W	01121	CB3335	1	R0780
A9R11	RESISTOR, COMP: 220 kΩ ±5%, 1/4 W	01121	CB2245	1	R0967
A9R12	RESISTOR, COMP: 100 Ω ±5%, 1/4 W	01121	CB1015	2	R0966
A9R13	RESISTOR, COMP: 15 kΩ ±5%, 1/4 W	01121	CB1535	1	R0728

REPLACEABLE PARTS LIST

Equipment/Assembly Designation: OPT 02, A9, AC CONVERTER ASSEMBLY #037196-4-1 (Cont'd)

(1) Reference Designation	(2) Name of Component and Description	(3) Mfr's Code	(4) Manufacturer's Part Number	(5) No. Times Used	(6) Remarks/ SD Stock No.
A9R14	RESISTOR, COMP: 120 kΩ ±5%, 1/4 W	01121	CB1245	1	R0807
A9R15	RESISTOR, COMP: 150 kΩ ±5%, 1/4 W	01121	CB1545	2	R0961
A9R16	RESISTOR, METAL FILM: 10 kΩ ±1%, 1/4 W, 25 PPM	19701	MF5C-E-1002-F	3	R2405
A9R17	RESISTOR, METAL FILM: 10 kΩ ±1%, 1/4 W, 25 PPM	19701	MF5C-E-1002-F	3	R2405
A9R18	RESISTOR, METAL FILM: 10 kΩ ±1%, 1/4 W, 25 PPM	19701	MF5C-E-1002-F	3	R2405
A9R19	RESISTOR, COMP: 10 kΩ ±5%, 1/4 W	01121	CB1035	1	R0766
A9R20	RESISTOR, COMP: 4.99 kΩ ±1%, 1/4 W, 25 PPM	91637	MFF 1/8 T9	2	R2677
A9R21	RESISTOR, COMP: 1.2 kΩ ±5%, 1/4 W	01121	CB1225	1	R0809
A9R22	RESISTOR, COMP: 4.99 kΩ ±1%, 1/4 W, 25 PPM	91637	MFF 1/8 T9	2	R2677
A9R23	RESISTOR, COMP: 2.7 kΩ ±5%, 1/4 W	01121	CB2725	3	R0937
A9R24	RESISTOR, COMP: 100 Ω ±5%, 1/4 W	01121	CB1015	2	R0966
A9R25	RESISTOR, METAL FILM: 22.1 kΩ ±1%, 1/4 W, 25 PPM	91637	MFF 1/8 T9	1	R1514
A9R26	Not used				
A9R27	RESISTOR, COMP: 150 kΩ ±5%, 1/4 W	01121	CB1545	2	R0961

REPLACEABLE PARTS LIST

Equipment/Assembly Designation: OPT 02, A9, AC CONVERTER ASSEMBLY #037196-4-1 (Cont'd)

(1) Reference Designation	(2) Name of Component and Description	(3) Mfr's Code	(4) Manufacturer's Part Number	(5) No. Times Used	(6) Remarks/ SD Stock No.
A9R28	RESISTOR, POTENTIOMETER, CERAMIC: 50 kΩ ±10%, 3/8 W, 15-turn, P.C. mt., end adjust	73138	89PR50K	1	R2783
A9R29	RESISTOR, POTENTIOMETER, CERAMIC: 1 kΩ ±10%, 3/8 W, 15-turn, end adjust	73138	89PR1K	2	R2816
A9R30	RESISTOR, COMP: 2.7 kΩ ±5%, 1/4 W	01121	CB2725	3	R0937
A9R31	RESISTOR, POTENTIOMETER, CERAMIC: 1 kΩ ±10%, 3/8 W, 15-turn, end adjust	73138	89PR1K	2	R2816
A9R32	Not used				
A9R33	RESISTOR, COMP: 2.7 Ω ±5%, 1/4 W	01121	CB27G5	1	R1697
A9R34	RESISTOR, COMP: 2.2 MΩ ±5%, 1/4 W	01121	CB2255	1	R1014
A9S1	SWITCH, REED: 25 A, 28 Vdcw	95348	MR-1077-20-40AT	3	S0400
A9S2	SWITCH, REED: 25 A, 28 Vdcw	95348	MR-1077-20-40AT	3	S0400
A9S3	SWITCH, REED: 25 A, 28 Vdcw	95348	MR-1077-20-40AT	3	S0400
A9U1	INTEGRATED CIRCUIT: Linear voltage regulator	04713	MC1539G	1	025794
A9U2	INTEGRATED CIRCUIT: Linear voltage regulator	27014	LM201A	1	025758
	EXTRACTOR, P.C., PLAIN	51495	1743	1	H1743
	EXTRACTOR, P.C., HOT STAMP A9	06811	039842-8	1	039842-8

REPLACEABLE PARTS LIST

Equipment/Assembly Designation: OPT 02, A9, AC CONVERTER ASSEMBLY #037196-4-1 (Cont'd)

(1) Reference Designation	(2) Name of Component and Description	(3) Mfr's Code	(4) Manufacturer's Part Number	(5) No. Times Used	(6) Remarks/ SD Stock No.
	PIN, SPRING	73957	50-094-0250	2	H1083
	TERMINAL: Swage bifurcated	88245	2000B	2	E0100
	TERMINAL: Teflon	71279	4034-3-0519	10	51024460
	SHIELD, SWITCH	06811	037432	3	037432
	TAPE: Copper w/adhesive back	76381	X-1181 1/2 in		H1943
	SHIELD: Reed coil	06811	037256-1-1	3	037256-1-1

CIRCUIT DESCRIPTION
OPTION 03, A7, OHMS CURRENT SOURCE
SCHEMATIC #037192-7-1

The A7 circuit board in the analog section of the Model 7110A DMM functions as an isolated current source to establish predetermined currents in unknown resistors so that the voltage measuring portion of the instrument can make a determination of the potential drop in any part of the external circuit specified by the operator. The reference currents are derived from an A7A1, RVL-3 voltage reference unit at about 10 volts and series dropping resistors to the summing junction of an operational amplifier. For the .1, 1, and 10 Ranges, the current is 1 mA derived from the 10 volt drop in a 10 kΩ resistor. For the 100 Range, the current is .1 mA derived from the 10 volts drop in 100 kΩ. On the 10,000 Range the reference voltage is attenuated so that, effectively, there is a 1 volt drop in a 1 MΩ resistor to give a 1 μA of current.

Since the input current of the operational amplifier is much smaller than these reference currents, and since the input voltage will be very small, then the same current will flow in the external resistance path as into the summing junction from the reference source. The voltage developed across the elements in the external path must be less than 15 volts in order for the current source to remain in its linear operating region.

Protective circuits are incorporated around this amplifier to prevent failure in the event that a high voltage source should be connected to the current source. If the output, 20&X, is positive with respect to 22&Z, then A7CR4 will be reverse-biased with most of the external applied voltage. If the polarity is reversed then the external voltage will be added to the -265 volt bias supply to drive current through the 200 kΩ resistor and back-bias A7CR3. Potentials across the amplifier will remain within rated limits under the adverse condition of inadvertant application of voltage to the current source. Resistor network A7A3 provides for the coarse adjustment of the output of A7A1, RVL-3, in the process of making the instrument calibration. Resistors in this assembly are shorted to obtain the one of sixty-four series resistor values which will bring the fine control into the required voltage range.

The shield connections 19&W and 21&Y, are connected to the power supply common of the current source, and are carried to the rear of the front panel and to the outer terminal of the triaxial connector used on the rear of the instrument. In making connections to the rear of the unit, two coaxial cables should be used with the center conductors connected to the current source and the two shields connected to the current source shield. These cables can then be carried for considerable distance without a leakage path between the central conductors so that remote high resistances can be measured with accuracy. Care needs to be exercised in

using the front panel to ensure that there are no current paths between the current source terminals, other than the resistor under test, or a low reading will result.

		Max. Size
R4	900,000 Ω	0.875L X 0.328D
R5	111,250 Ω	0.656L X 0.250D
R7	900,000 Ω	0.875L X 0.328D
R9	90,000 Ω	0.656L X 0.250D
R11	10,000 Ω	0.656L X 0.250D

TC of each resistor to be less than 5 ppm/C over the range from 0 to 70 C. Maximum voltage drop in any resistor in the set in the application is 10 volts dc.

Resistors are matched so that the sum of resistance values, $R_4 + R_5 + R_7 + R_9 + R_{11} = 2{,}011{,}250\ \Omega \pm 0.5\%$. The following ratios and tolerance-on-ratio are held.

$R_4 = R_7$

$$\frac{R_4}{\Sigma R} = \frac{900{,}000}{2{,}011{,}250} = 0.447482 \quad \pm 0.05\%$$

$$\frac{R_5}{\Sigma R} = \frac{111{,}250}{2{,}011{,}250} = 0.0553138 \pm 0.05\%$$

$$\frac{R_9}{\Sigma R} = \frac{90{,}000}{2{,}011{,}250} = 0.0447482 \pm 0.05\%$$

$$\frac{R_{11}}{\Sigma R} = \frac{10{,}000}{2{,}011{,}250} = 0.0049720 \pm 0.05\%$$

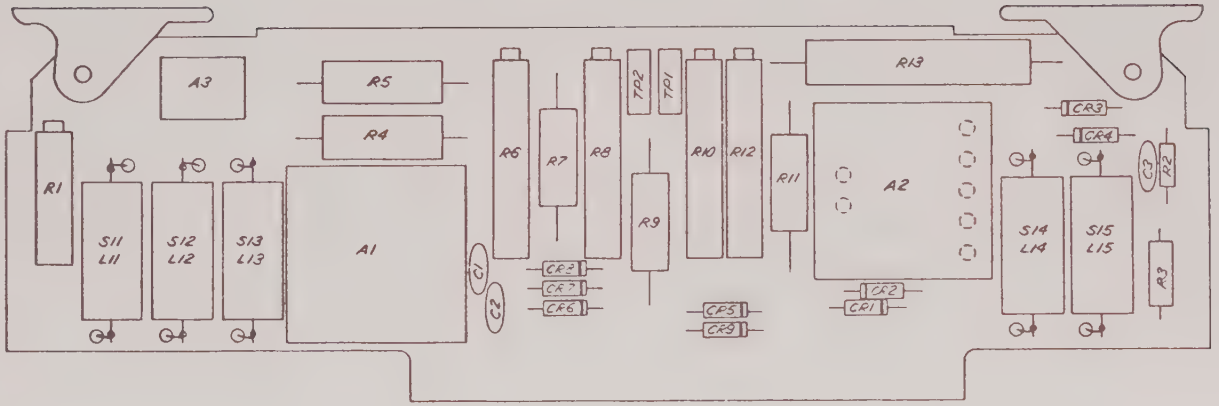

OPTION 03, A7, OHMS CURRENT SOURCE ASSEMBLY #037192-4-1 REV A

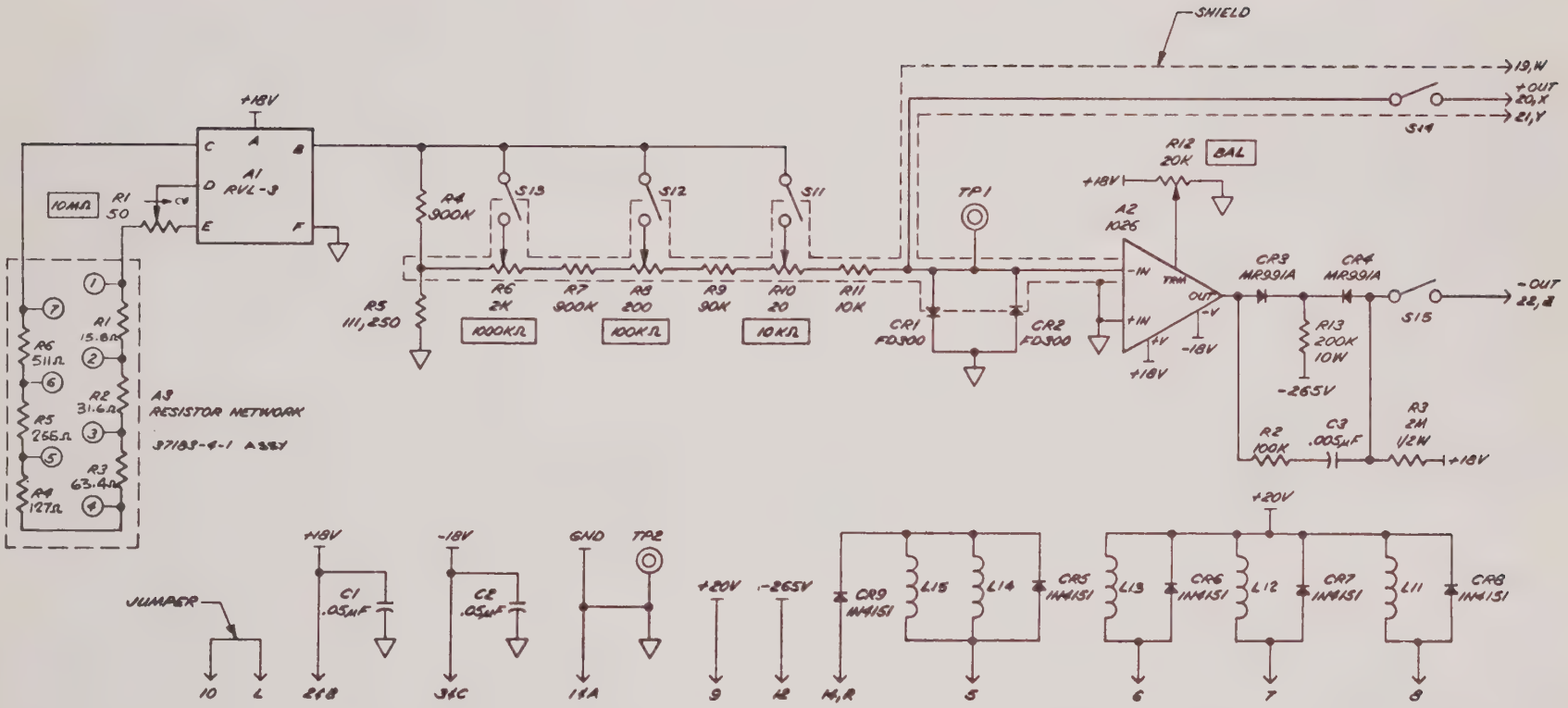

OPTION 03, A7, OHMS CURRENT SOURCE SCHEMATIC #037192-7-1 REV A

REPLACEABLE PARTS LIST

Equipment/Assembly Designation OPT 03, A7, OHMS CURRENT SOURCE #037192-4-1

(1) Reference Designation	(2) Name of Component and Description	(3) Mfr's Code	(4) Manufacturer's Part Number	(5) No. Times Used	(6) Remarks/ SD Stock No.
	P.C. BOARD, OHMS CURRENT SOURCE	06811	037192-1-1	1	037192-1-1
A7A1	ASSEMBLY, VOLTAGE REFERENCE: RVL3	06811	037289-4-1	1	037289-4-1
A7A2	INTEGRATED CIRCUIT: Operational Amplifier	33967	A1026	1	91005000
A7A3	RESISTOR NETWORK: Ohms and reference	06811	037183-4-1	1	037183-4-1
A7C1	CAPACITOR, CERAMIC: .05 µF +80-20%, 50 Vdcw	56289	TGS50	2	C0708
A7C2	CAPACITOR, CERAMIC: .05 µF +80-20%, 50 Vdcw	56289	TGS50	2	C0708
A7C3	CAPACITOR, CERAMIC: .005 µF, 1 kV	71590	DD-502	1	C0221
A7CR1	SEMICONDUCTOR DEVICE, DIODE: 125 Vdcw	13715	FD300	2	26012320
A7CR2	SEMICONDUCTOR DEVICE, DIODE: 125 Vdcw	13715	FD300	2	26012320
A7CR3	SEMICONDUCTOR DEVICE, DIODE: .25 A, 1500 Vdcw	04713	MR991A	2	CR0374
A7CR4	SEMICONDUCTOR DEVICE, DIODE: .25 A, 1500 Vdcw	04713	MR991A	2	CR0374
A7CR5	SEMICONDUCTOR DEVICE, DIODE: Silicon, 50 Vdcw, 150 mA	03508	1N4151	2	CR0150
A7CR6	SEMICONDUCTOR DEVICE, DIODE: Silicon, 50 Vdcw, 150 mA	03508	1N4151	2	CR0150

REPLACEABLE PARTS LIST

Equipment/Assembly Designation OPT 03, A7, OHMS CURRENT SOURCE #037192-4-1 (Cont'd)

(1) Reference Designation	(2) Name of Component and Description	(3) Mfr's Code	(4) Manufacturer's Part Number	(5) No. Times Used	(6) Remarks/ SD Stock No.
A7CR7	SEMICONDUCTOR DEVICE, DIODE: Silicon, 50 Vdcw, 150 mA	03508	1N4151	2	CR0150
A7CR8	SEMICONDUCTOR DEVICE, DIODE: Silicon, 50 Vdcw, 150 mA	03508	1N4151	2	CR0150
A7CR9	SEMICONDUCTOR DEVICE, DIODE: Silicon, 50 Vdcw, 150 mA	03508	1N4151	2	CR0150
A7L11	COIL, REED: 32 Vdcw	71707	U-32-P	3	21103130
A7L12	COIL, REED: 32 Vdcw	71707	U-32-P	3	21103130
A7L13	COIL, REED: 32 Vdcw	71707	U-32-P	3	21103130
A7L14	COIL, REED: 24 Vdcw	71707	U-24-P	2	L0055
A7L15	COIL, REED: 24 Vdcw	71707	U-24-P	2	L0055
A7S11	SWITCH, REED: 28 Vdcw, .01 A	12617	MRMF-2	3	05036220
A7S12	SWITCH, REED: 28 Vdcw, .01 A	12617	MRMF-2	3	05036220
A7S13	SWITCH, REED: 28 Vdcw, .01 A	12617	MRMF-2	3	05036220
A7S14	SWITCH, REED: 1 kV, 10 mA	95348	MR-138	2	S0333
A7S15	SWITCH, REED: 1 kV, 10 mA	95348	MR-138	2	S0333
A7R1	RESISTOR, POTENTIOMETER, CERAMIC: 50 Ω ±20%, 3/8 W 15-turn, P.C. mt., end adjust	73138	89PR-50	1	R2822
A7R2	RESISTOR, COMP: 100 kΩ ±5%, 1/4 W	01121	CB1045	1	R0741
A7R3	RESISTOR, COMP: 2 MΩ ±5%, 1/2 W	01121	EB2055	1	R0634

REPLACEABLE PARTS LIST

Equipment/Assembly Designation OPT 03, A7, OHMS CURRENT SOURCE #037192-4-1 (Cont'd)

(1) Reference Designation	(2) Name of Component and Description	(3) Mfr's Code	(4) Manufacturer's Part Number	(5) No. Times Used	(6) Remarks/ SD Stock No.
A7R4	RESISTOR: Part of set. 900 kΩ	73138	89PR-50	1	R2822
A7R5	RESISTOR: Part of set. 111.25 kΩ			1	
A7R6	RESISTOR, POTENTIOMETER, CERAMIC: 2 kΩ, ±10%, 3/4 W, 22-turn, end adjust	73138	78PR2K	1	R2270
A7R7	RESISTOR: Part of set. 900 kΩ	73138	89PR-50	1	R2822
A7R8	RESISTOR, POTENTIOMETER, CERAMIC: 200 Ω, ±10%, 3/4 W, 25-turn, end adjust	73138	78PR200	1	R2215
A7R9	RESISTOR: Part of set. 90 kΩ			1	
A7R10	RESISTOR, POTENTIOMETER, CERAMIC: 20 Ω, ±20%, 3/4 W, 22-turn, end adjust	73138	78PR20	1	R2603
A7R11	RESISTOR: Part of set. 10 kΩ			1	
A7R12	RESISTOR, POTENTIOMETER, CERAMIC: 20 kΩ, ±10%, 3/4 W, 22-turn, end adjust	73138	78PR20K	1	R2271
A7R13	RESISTOR, COMP: 200 kΩ, 10 W-WW	15915	TS-10W	1	R2717
	EXTRACTOR, P.C., PLAIN	51495	1743	1	H1743
	EXTRACTOR, P.C., HOT STAMP	06811	039842-7	1	039842-7
	PIN, SPRING: .094D X .25 L	73957	50-094-0250	2	H1083

REPLACEABLE PARTS LIST

Equipment/Assembly Designation OPT 03, A7, OHMS CURRENT SOURCE #037192-4-1 (Cont'd)

(1) Reference Designation	(2) Name of Component and Description	(3) Mfr's Code	(4) Manufacturer's Part Number	(5) No. Times Used	(6) Remarks/ SD Stock No.
	TEST POINT: Brown P.C. mt., parallel	91506	8041-1G3	1	E0235
	TEST POINT: Red P.C. mt., parallel	91506	8041-1G4	1	E0236
	SOCKET, COMPONENT LEAD SPRING: .04 X .18 max.	06776	PS-402-44	7	X0182

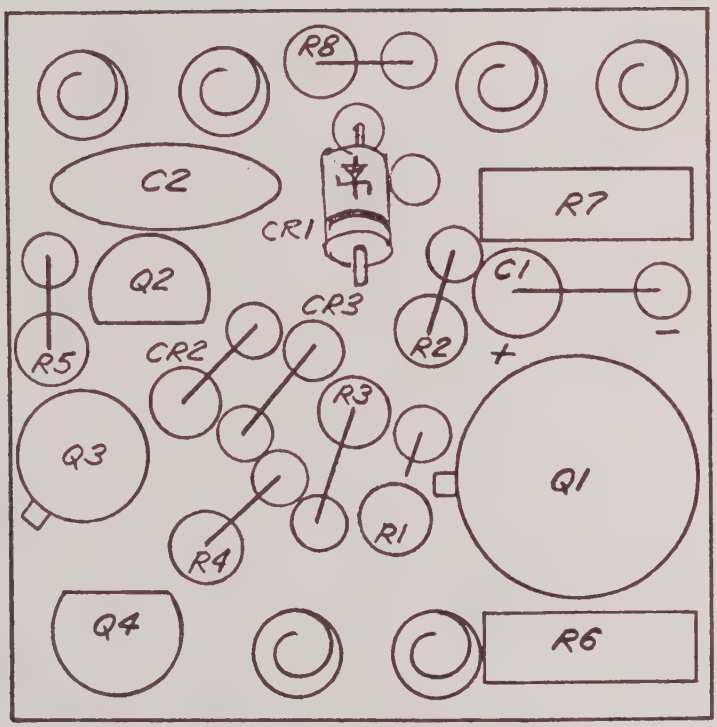

OPTION 03, A7A1, RVL-3 ASSEMBLY #037290-4-1 REV B

SPECIFICATIONS

SUPPLY VOLTAGE — +15 V TO +25 VDC
OUTPUT VOLTAGE — +10.000 VDC NOM

LOAD REGULATION — .001 % /mA (6 mA max, E_s > 11.5 V)
LINE REGULATION — .001 % /V
NOISE (300 KHBW) — 200. μVpp
CAN LOAD — .01 μF
PWR RQMNT — 9.5 mA @ NO LOAD

RATED LOAD	MINIMUM SUPPLY VOLTAGE
0 mA	15
1 "	15.7
2 "	16.1
3 "	16.6
4 "	17.0
5 "	17.5

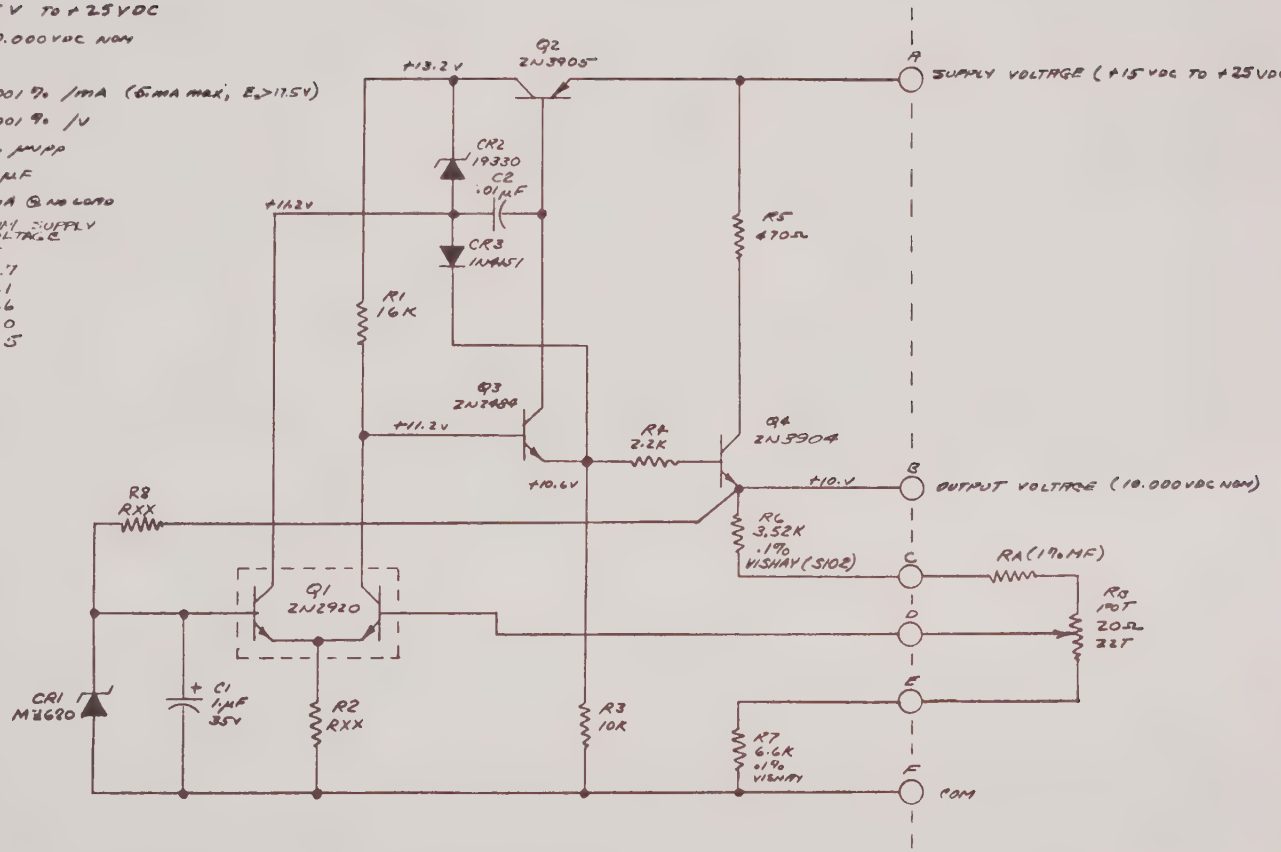

OPTION 03, A7A1, RVL-3 SCHEMATIC #037290-7-1 REV B

REPLACEABLE PARTS LIST

Equipment/Assembly Designation OPT 03, A7A1, RVL-3 ASSEMBLY #037290-4-1

(1) Reference Designation	(2) Name of Component and Description	(3) Mfr's Code	(4) Manufacturer's Part Number	(5) No. Times Used	(6) Remarks/ SD Stock No.
	P.C. BOARD, RVL-3 ASSEMBLY	06811	037290-1-1	1	037290-1-1
A7A1C1	CAPACITOR, TANT: 1 µF ±10%, 35 Vdcw	56289	150D105X9035A2	1	C0524
A7A1C2	CAPACITOR, CERAMIC: .01 µF +80-20%, 100 Vdcw	91418	TA110	1	C0556
A7A1CR1	SEMICONDUCTOR DEVICE, DIODE: 7.5 mA ±5%, 6.2 Vdcw	04713	MZ620	1	CR0371
A7A1CR2	SEMICONDUCTOR DEVICE, DIODE ZENER: 10 mA ±5%, 2.2 Vdcw	06811	019330	1	019330
A7A1CR3	SEMICONDUCTOR DEVICE, DIODE: Silicon, 50 Vdcw, 150 mA	03508	1N4151	1	CR0150
A7A1Q1	SEMICONDUCTOR DEVICE, TRANSISTOR: Silicon, dual, NPN	07263	2N2920	1	26011350
A7A1Q2	SEMICONDUCTOR DEVICE, TRANSISTOR: Silicon, PNP	04713	2N3904	1	Q0248
A7A1Q3	SEMICONDUCTOR DEVICE, TRANSISTOR: Silicon, NPN	07263	2N2484	1	26010670
A7A1Q4	SEMICONDUCTOR DEVICE, TRANSISTOR: Silicon, NPN	04713	2N3904	1	Q0247
A7A1R1	RESISTOR, COMP: 16 kΩ ±5%, 1/4 W	01121	CB1635	1	R0881
A7A1R2	RESISTOR, SELECTED	06811	037177-6-1	1	037177-6-1
A7A1R3	RESISTOR, COMP: 10 kΩ ±5%, 1/4 W	01121	CB1035	1	R0766

REPLACEABLE PARTS LIST

Equipment/Assembly Designation OPT 03, A7A1, RVL-3 ASSEMBLY #037290-4-1 (Cont'd)

(1) Reference Designation	(2) Name of Component and Description	(3) Mfr's Code	(4) Manufacturer's Part Number	(5) No. Times Used	(6) Remarks/ SD Stock No.
A7A1R4	RESISTOR, COMP: 2.2 kΩ ±5%, 1/4 W	01121	CB2225	1	R0749
A7A1R5	RESISTOR, COMP: 470 Ω ±5%, 1/4 W	01121	CB4715	1	R1044
A7A1R6	RESISTOR, METAL FILM: 3.52 kΩ ±1%, .3 W, 1 PPM	18612	S102	1	R2782
A7A1R7	RESISTOR, METAL FILM: 6.6 kΩ ±1%, .3 W, 5 PPM	18612	S102	1	02417540
A7A1R8	RESISTOR, SELECTED	06811	037175-6-1	1	037175-6-1
	AMPLIFIER, HEUX	07263	B09046321, Rev B	6	09046321

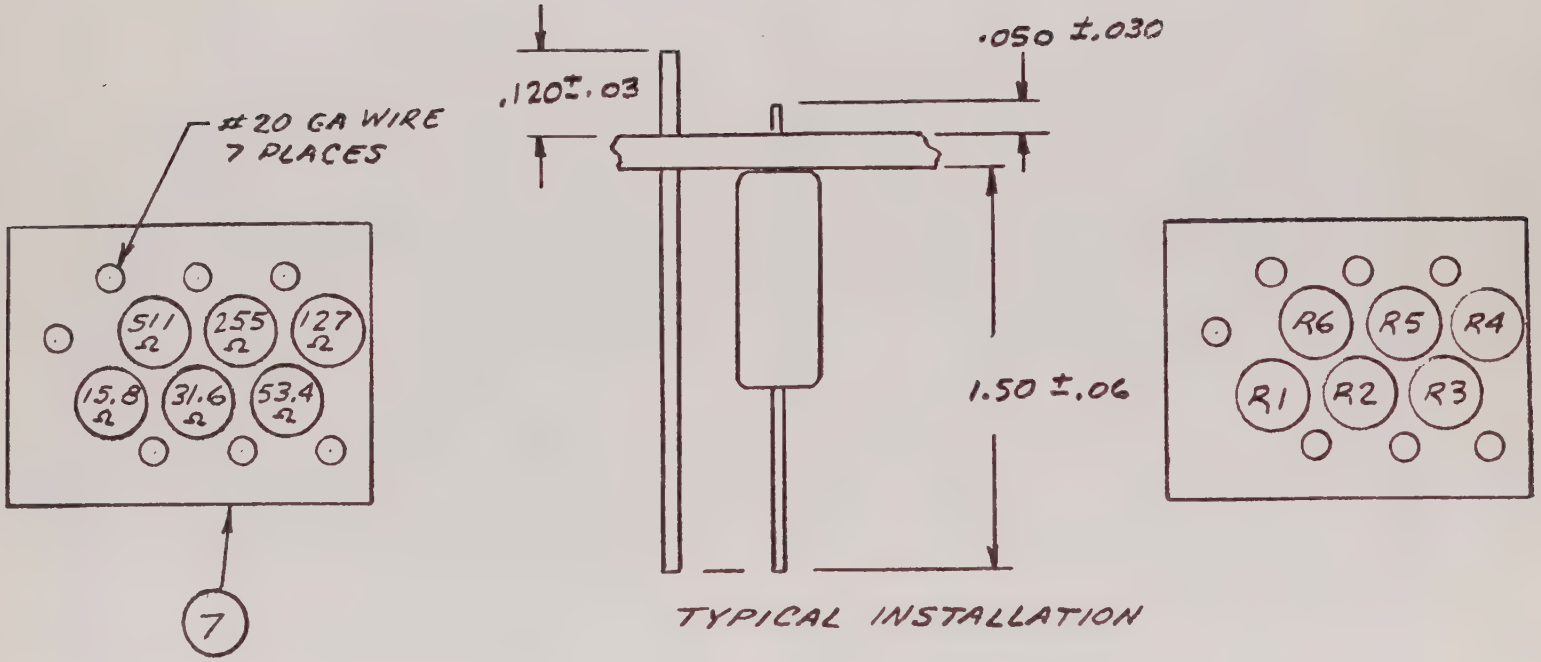

OPTION 03, A7A3, RESISTOR NETWORK ASSEMBLY #037183-4-1 REV A

TABLE 6.4 REPLACEABLE PARTS LIST

Equipment/Assembly Designation OPT 03, A7A3, RESISTOR NETWORK #037183-4-1

(1) Reference Designation		(2) Name of Component and Description	(3) Mfr's Code	(4) Manufacturer's Part Number	(5) No. Times Used	(6) Remarks/ SD Stock No.
ITEM	REF					
7	A7A3	P.C. BOARD, RESISTOR NETWORK	06811	037179-1-1	1	037179-1-1
10	A7A3R1	RESISTOR, METAL FILM: 15.8 Ω ±1%, 1/8 W, 100 PPM	19701	MF5C-D-15R8F	1	R2739
11	A7A3R2	RESISTOR, METAL FILM: 31.6 Ω ±1%, 1/8 W, 100 PPM	19701	MF5C-D-31R6F	1	R2740
12	A7A3R3	RESISTOR, METAL FILM: 63.4 Ω ±1%, 1/8 W, 100 PPM	19701	MF5C-D-63R4F	1	R2741
13	A7A3R4	RESISTOR, METAL FILM: 127 Ω ±1%, 1/8 W, 100 PPM	19701	MF5C-D-1270F	1	R2742
14	A7A3R5	RESISTOR, METAL FILM: 255 Ω ±1%, 1/8 W, 100 PPM	19701	MF5C-D-2550F	1	R2743
15	A7A3R6	RESISTOR, METAL FILM: 511 Ω ±.5%, 1/8 W, 100 PPM	19701	MF5C-D-5110D	1	R2746

CIRCUIT DESCRIPTION
OPTION 05, A14, CONNECTOR BCD (8-4-2-1)
FINAL ASSEMBLY #037221-4-1

The A14 BCD Connector, Option 05, is a buffer amplifier and signal conditioner which transmits data to a remote receiver. Signals from A11, Digital Count and Control, are routed through A14, BCD Connector, to J207. All BCD, decimal point, function, and control information is available to the remote equipment. Ground true BCD inputs are routed through inverters A14U1, U2, U3, and U7, and converted to positive true signals. Decimal point information is applied through NAND gates, A14U4, and furnished to the receiver as the negative exponent of the measurement, N X 10^{a}. Where (N) is the number measured and (a) is the negative exponent.

Function signals are applied, at ground true level, to NAND gates A14U5 and U6. The positive true BCD output is coded to designate the function. See BCD pin assignments (05 Option) Table 3.5, page 3-11. Polarity information is furnished through two inverters connected in tandem. If the signal at pin 2 of J2 is low, pin 6 of A14U1 is positive and the polarity signal at pin 42, J207, is a positive true, indication of + polarity. A high input at pin 2 will result in a positive true indication of - polarity at terminal 17 of J207. Overload is indicated in a like manner but uses only a single inverter. A low input results in a positive true $\overline{\text{OL}}$ output through inverter A14U1. A high input is routed directly to pin 43 of J207, indicating an overload, 1.3 times full scale, condition.

Positive 5 V is furnished to the inverters and gates from J2, pin R, and 0 V from J2, pin F. A voltage divider network, A14C1, R3, R2 and R1, provide outputs of 0.5 V at pin 24 and 2.5 V at pin 25 of J207. This voltage is available as a reference voltage for comparison by properly equipped remote receivers. Control information signals, both to and from the DMM, are ground true signals, routed directly through the board. $\overline{\text{INHIBIT}}$ $\overline{\text{RESET}}$, $\overline{\text{START}}$ and $\overline{\text{INHIBIT}}$ $\overline{\text{TRANSFER}}$ (positive true labels) are received from the remote equipment. PRINT and BUSY are originated in the DMM. The open START signal is 5 V through a 3.3 kΩ resistor. The required 4.5 mA. The start circuit will trigger with a 3 V drop in .1 µs with a duration greater than 1 µs.

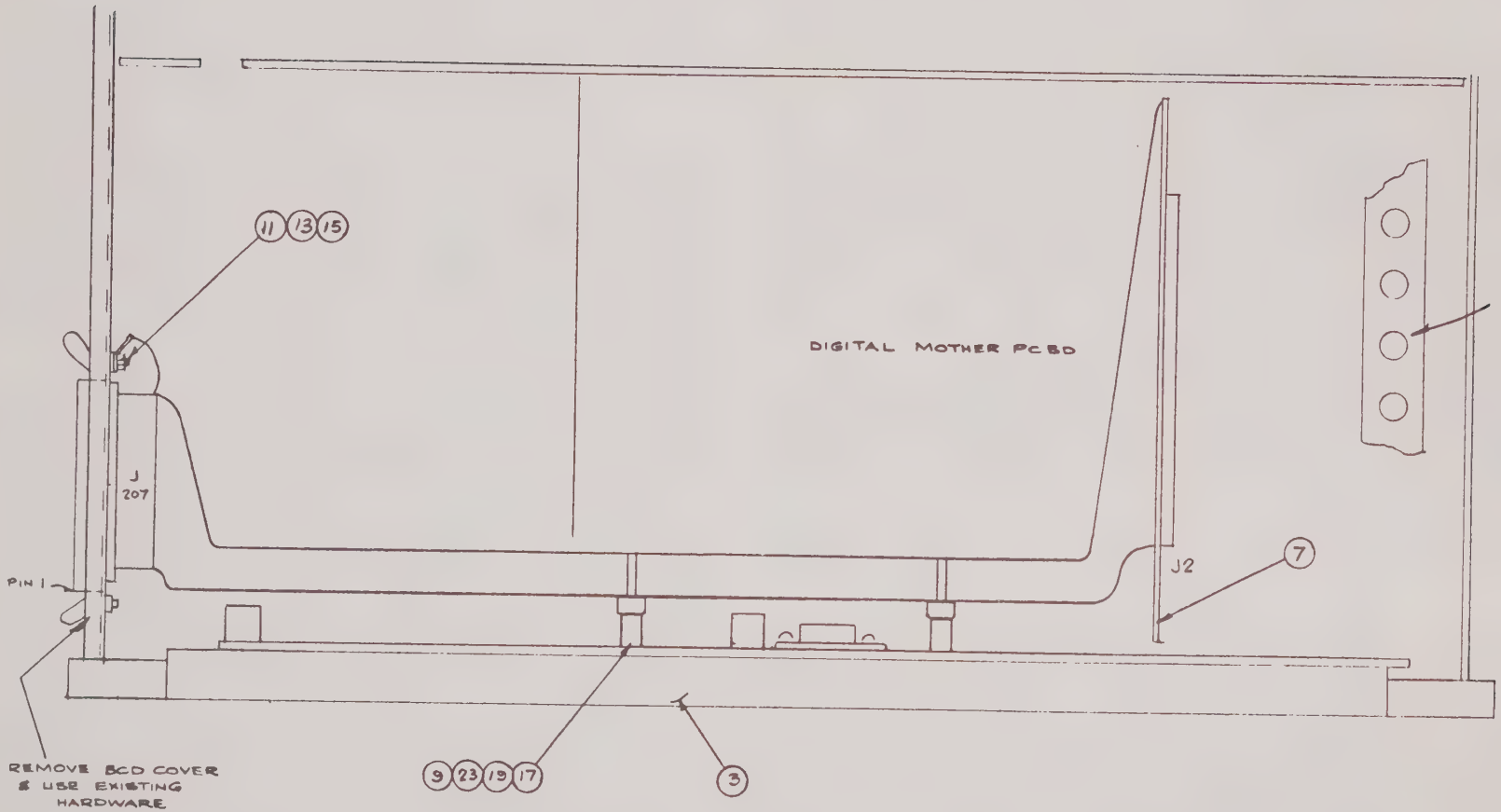

OPTION 05, A14, CONNECTOR BCD ASSEMBLY #037221-4-1 REV A

REPLACEABLE PARTS LIST

Equipment/Assembly Designation OPT 05, BCD ASSEMBLY #037221-4-1

(1) Reference Designation		(2) Name of Component and Description	(3) Mfr's Code	(4) Manufacturer's Part Number	(5) No. Times Used	(6) Remarks/ SD Stock No.
ITEM	REF					
3		ASSEMBLY, FINAL	06811	037160-8-1	1	037160-8-1
		ASSEMBLY, FINAL CHASSIS	06811	037237-4-1		037237-4-1
7		ASSEMBLY, BOARD AND CABLE	06811	037186-4-1	1	037186-4-1
9		SPACER: 6 X 3/8	83330	2101	2	H1579
11		SCREW, PAN HEAD MACHINE: 2-56 X 1/2	MIL	MS51957-7	1	H1124
13		NUT: Hex 2-56	MIL	MS35649-224	1	H0377
15		WASHER: Split-lock #2	MIL	MS35337-77	1	H0481
17		SCREW, PAN HEAD MACHINE: 4-40 X 5/8	MIL	MS51957-18	2	H0286
19		TIE, CABLE: Nylon	06383	SST1M	2	H1104
21	P207	CONNECTOR, MATING: 50-pin, male plug	02660	57-30500	1	J0171
23		TIE, ANCHOR	06383	TMIS4C	2	37021750

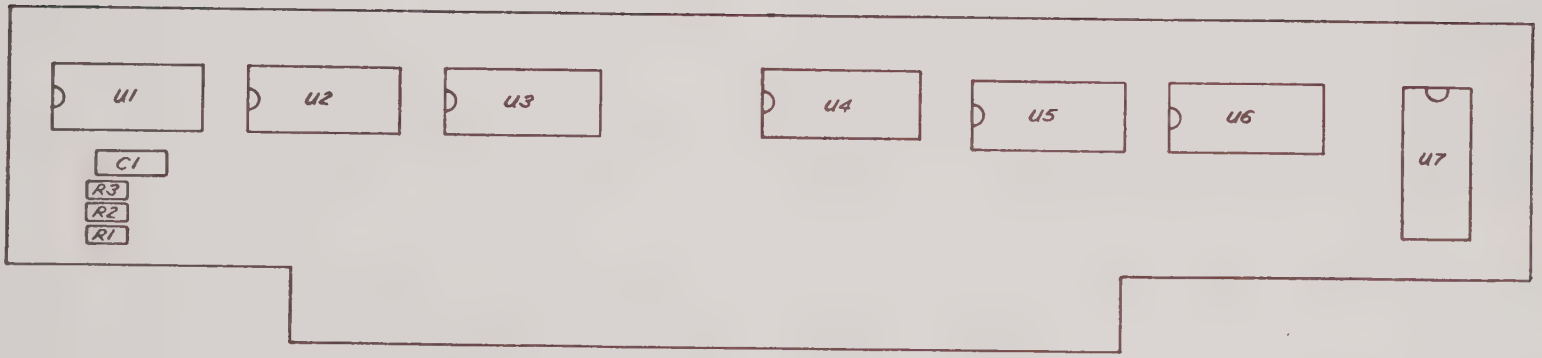

OPTION 05, A14, CONNECTOR BCD ASSEMBLY #037220-4-1 REV A

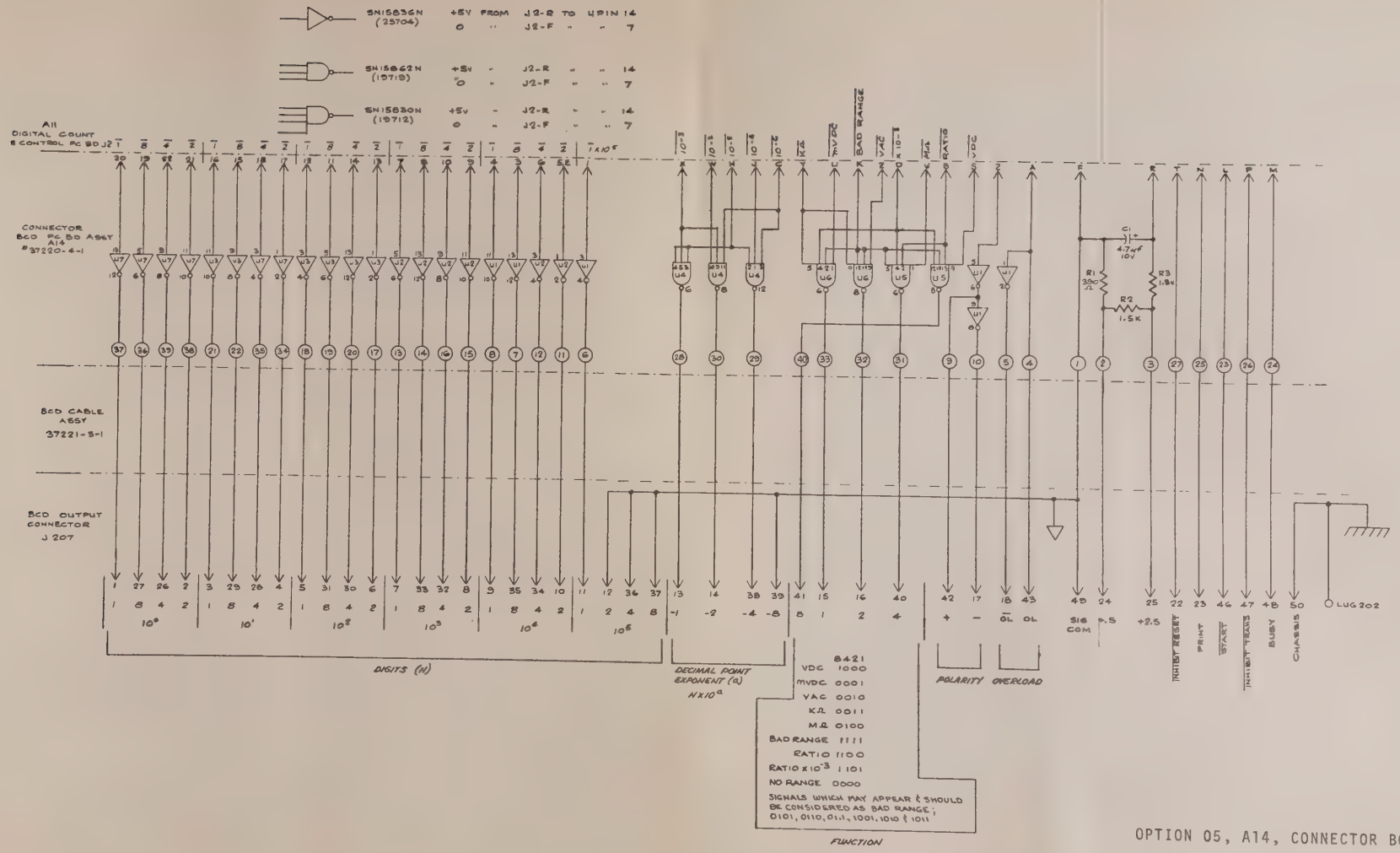

OPTION 05, A14, CONNECTOR BCD
SCHEMATIC #037220-7-1 REV A

REPLACEABLE PARTS LIST

Equipment/Assembly Designation OPT 05, A14, CONNECTOR BCD #037220-4-1

(1) Reference Designation	(2) Name of Component and Description	(3) Mfr's Code	(4) Manufacturer's Part Number	(5) No. Times Used	(6) Remarks/ SD Stock No.
	P.C. BOARD, CONNECTOR BNC	06811	037220-1-1	1	037220-1-1
A14C1	CAPACITOR, TANT:	56289	150D475X9010A2	1	C1011
A14R1	RESISTOR, COMP: 390 Ω ±5%, 1/8 W	01121	BB3915	1	R1450
A14R2	RESISTOR, COMP: 1.5 kΩ ±5%, 1/8 W	01121	BB1525	1	R2463
A14R3	RESISTOR, COMP: 1.8 kΩ ±5%, 1/8 W	01121	BB1825	1	R1455
A14U1	INTEGRATED CIRCUIT: 836 Hex inverted	04713	MC836P	4	025704
A14U2	INTEGRATED CIRCUIT: 836 Hex inverted	04713	MC836P	4	025704
A14U3	INTEGRATED CIRCUIT: 836 Hex inverted	04713	MC836P	4	025704
A14U4	INTEGRATED CIRCUIT: Triple 3-input, NAND gate	01295	SN15862N	1	19719
A14U5	INTEGRATED CIRCUIT: Dual 4-input, NAND gate	01295	SN15830N	2	19712
A14U6	INTEGRATED CIRCUIT: Dual 4-input, NAND gate	01295	SN15830N	2	19712
	TAPE, TEFLON	06811	74041520	A/R	74041520

CIRCUIT DESCRIPTION
OPTION 06, REMOTE CONTROL
SCHEMATIC #037226-7-1

With Option 06 installed, the Model 7110A may be operated remotely using single-line format. Control is provided over all RANGE and FUNCTION pushbuttons with DTL/TTL compatible ground true logic: "1" state (line called) = logic ground or +0.5 V dc maximum; "0" state (line not called) = open circuit or +2.2 V dc minimum. The connector type is a 24-contact Amphenol 57-40240 and mates with Amphenol 57-30240.

Press on the POWER and REMOTE pushbuttons, set the sample control to the desired rate, and remotely select the RANGE and FUNCTION of J208. The proper PIN and RANGE association is listed below:

OPTION 06, REMOTE PIN ASSIGNMENTS
(J208 REMOTE connector is Amphenol 57-40240)

Pin	Selected Function/Range[1]
1	REMOTE COMMON[2]
3	VDC
5	VAC
7	KΩ
9	RATIO
11	TEST
13	FILTER
15	AUTO
17	10,000
19	1000
20	100
21	10
22	1
23	.1

[1] The logic is ground true. If any line is low with respect to the Digital Common output line when not in REMOTE, the FUNCTION or RANGE called for by the front panel pushbuttons may be confused.

[2] This line is open when REMOTE is not called.

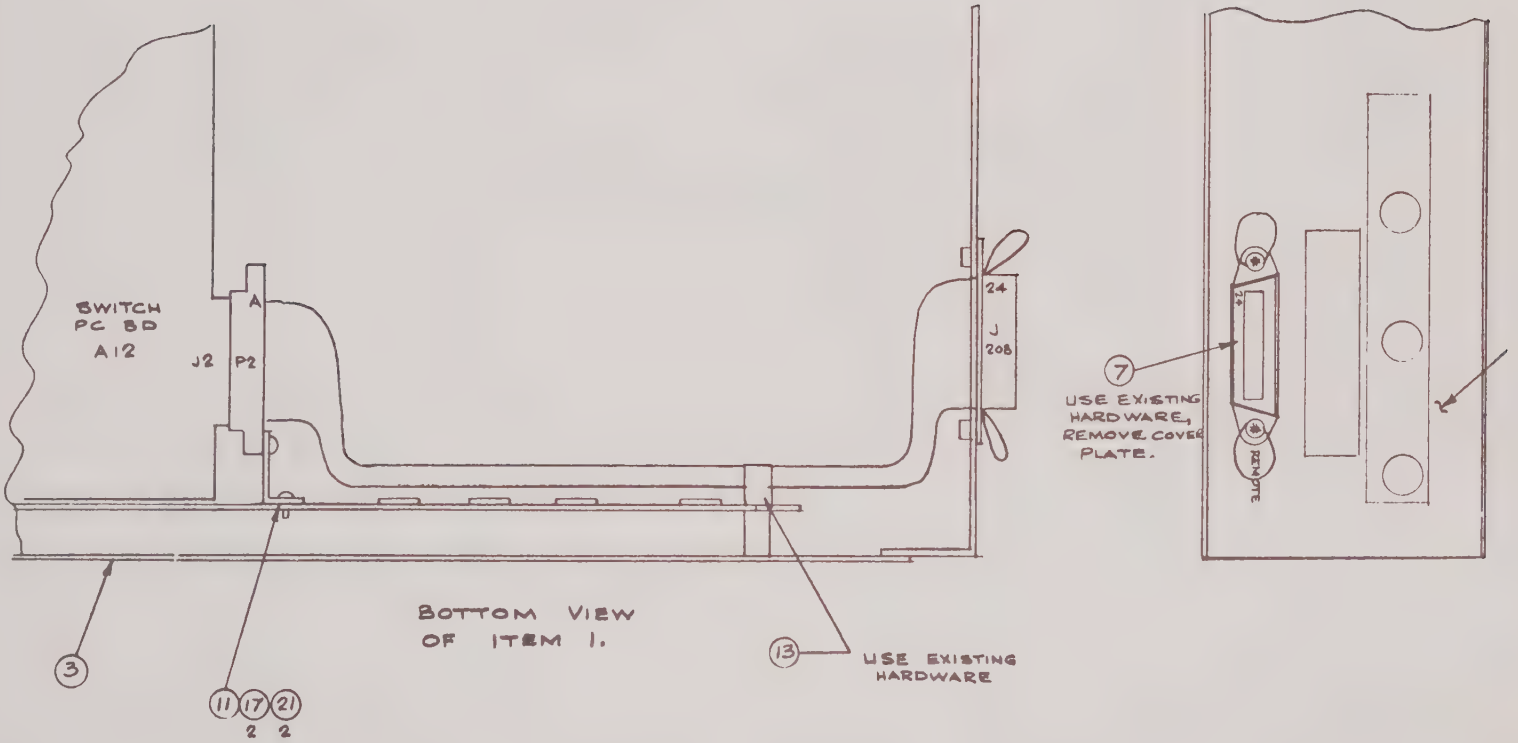

OPTION 06, REMOTE CONTROL ASSEMBLY #037226-4-1 REV A

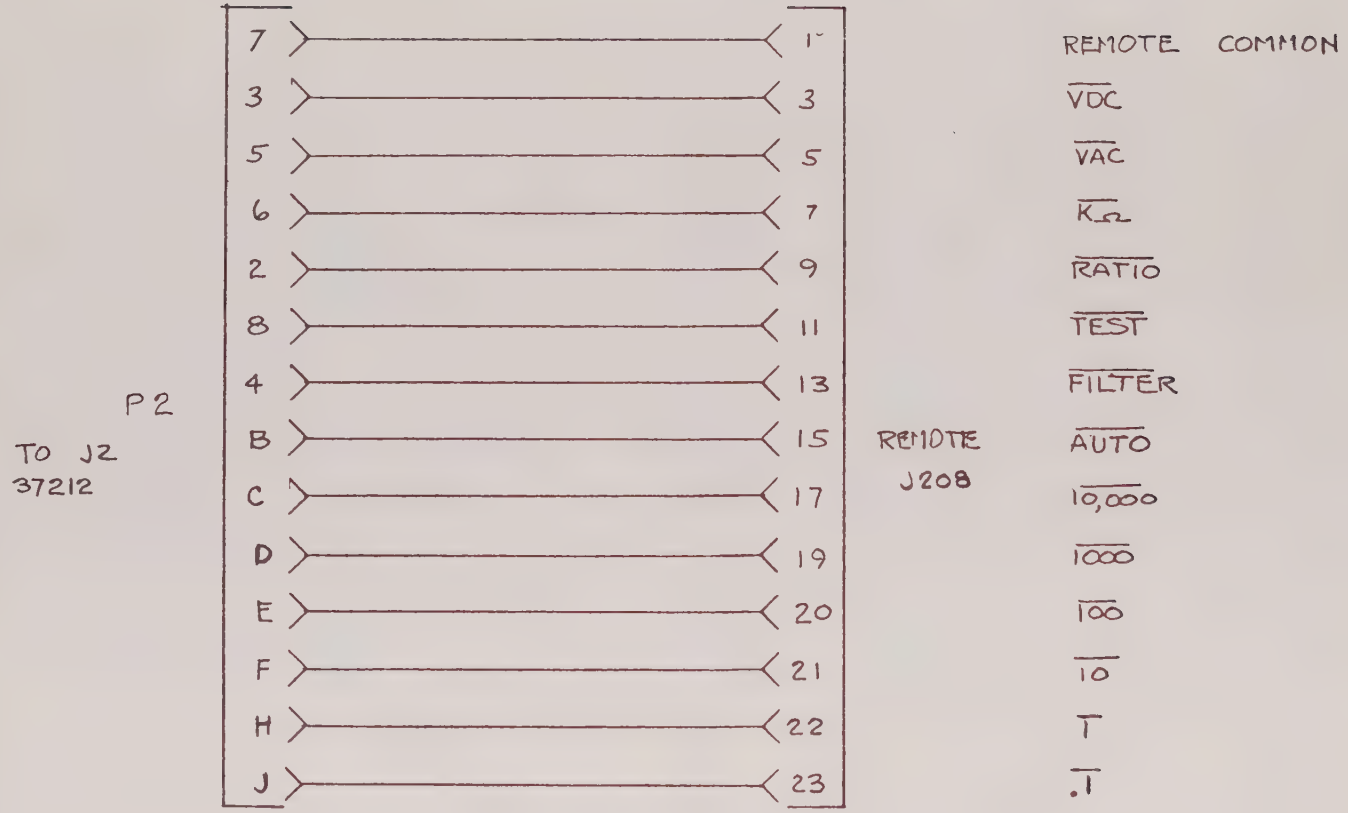

OPTION 06, REMOTE CONTROL SCHEMATIC #037226-7-1 REV A

REPLACEABLE PARTS LIST

Equipment/Assembly Designation OPT 06, REMOTE CONTROL ASSEMBLY #037226-4-1

(1) Reference Designation		(2) Name of Component and Description	(3) Mfr's Code	(4) Manufacturer's Part Number	(5) No. Times Used	(6) Remarks/ SD Stock No.
ITEM	REF					
2		ASSEMBLY, FINAL CHASSIS	06811	037237-4-1		037237-4-1
7		ASSEMBLY, REMOTE CABLE	06811	037226-3-1	1	037226-3-1
9	J208	CONNECTOR, 24 PIN	02660	57-40240	1	J0298
10	P2	CONNECTOR, 16 PIN	27642	81-6016-3100-00	1	J0623
11		BRACKET, REMOTE CONNECTOR	06811	037170-1-1	1	037170-1-1
13		CLAMP, CABLE: Nylon	95987	1/4-4NA	1	H0789
17		SCREW, PAN HEAD MACHINE: 4-40 X 5/16	MIL	MS51957-14	2	H1273
21		WASHER: Split-lock #4	MIL	MS35338-135	2	H0782
23	P208	CONNECTOR, MATING	02660	57-30240	1	J0244

CIRCUIT DESCRIPTION
OPTION 08, REAR INPUT
FINAL ASSEMBLY #037181-4-1

Option 08 allows rear input on the HI, LO, and GUARD SIGNAL INPUT triaxial connectors; and the HI, LO, and COMMON Ω CURRENT SOURCE. See Page 3-9 for special cable and instructions for resistance measurement.

Installation Instructions:

1) Remove unit top and bottom covers (if installed).
2) Remove buttons from Ω CURRENT SOURCE SIGNAL INPUT holes in rear panel.
3) Release wire #'s 124, 126, 128, 131, 133 and 135 from tie "A".
4) Carefully remove shrink tubing from wire ends.
5) Install hardware, note position of insulating washers. Bend lug 203 as shown.
6) Re-tie cables as required.
7) Replace covers on unit.

INSTALLATION INSTRUCTIONS.

1. REMOVE UNIT TOP & BOTTOM COVERS (IF INSTALLED)
2. REMOVE BUTTONS FROM Ω & SIG HOLES IN REAR PANEL.
3. RELEASE WIRE #S 124, 126, 128, 131, 133 & 135 FROM TIE 'A'
4. CAREFULLY REMOVE SHRINK TUBING FROM WIRE ENDS.
5. INSTALL HARDWARE, NOTE POSITION OF INSULATING WASHERS. BEND LUG 203 AS SHOWN
6. RE-TIE CABLES AS REQUIRED
7. REPLACE COVERS ON UNIT

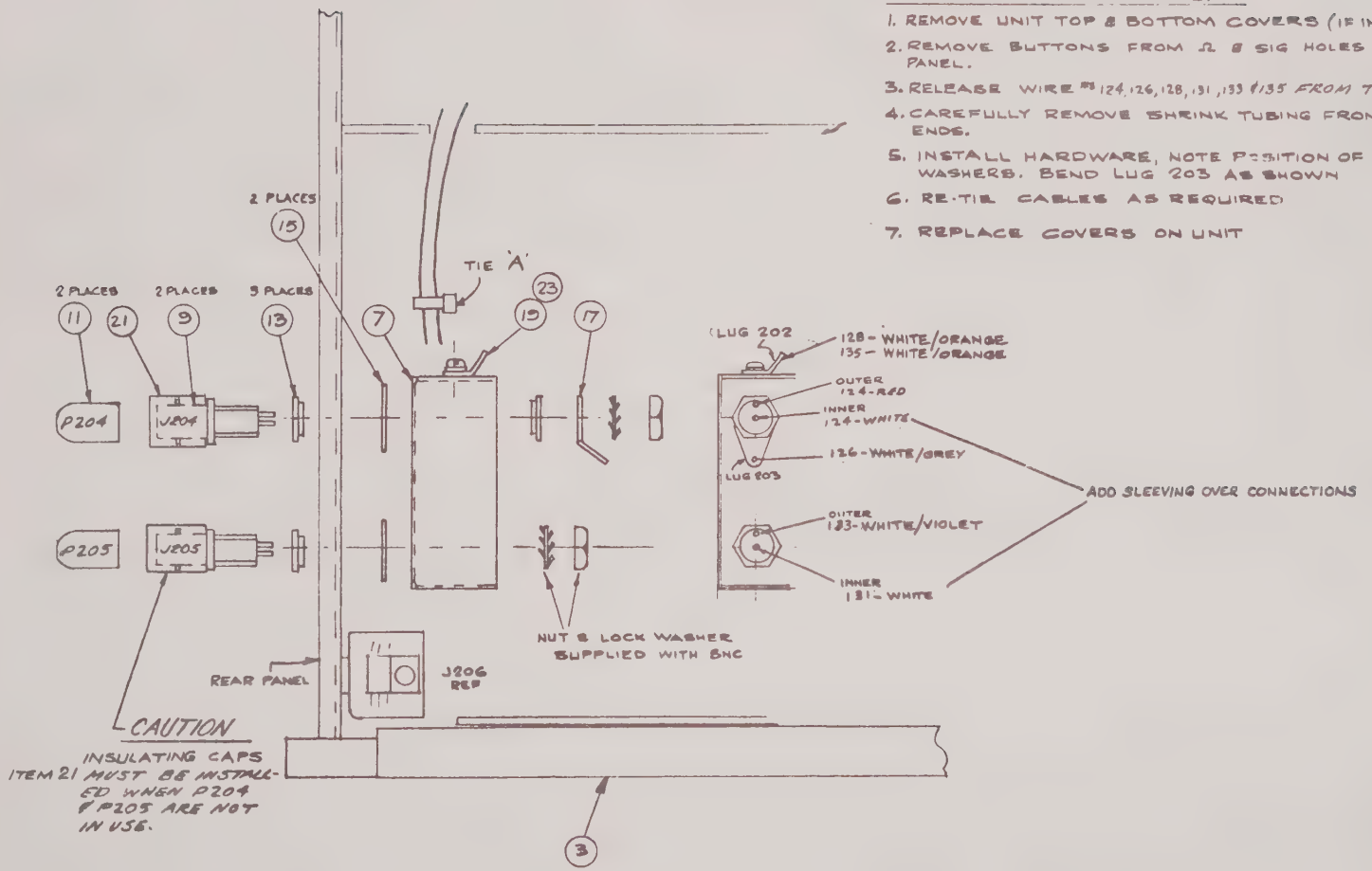

OPTION 08, REAR INPUT ASSEMBLY #037181-4-1 REV E

REPLACEABLE PARTS LIST

Equipment/Assembly Designation: OPT 08, REAR INPUT ASSEMBLY #037181-4-1

(1) Reference Designation		(2) Name of Component and Description	(3) Mfr's Code	(4) Manufacturer's Part Number	(5) No. Times Used	(6) Remarks/ SD Stock No.
ITEM	REF					
7		BOX, GUARD	06811	037174-1-1	1	037174-1-1
9	J204	CONNECTOR, BNC WITH HARDWARE	91836	KC79-85	2	09066790
9	J205	CONNECTOR, BNC WITH HARDWARE	91836	KC79-85	2	09066790
11	P204	CABLE, ACCESSORY INPUT	06811	50290351	2	50290351
11	P205	CABLE, ACCESSORY INPUT	06811	50290351	2	50290351
13		WASHER: Nylon	83330	2679	2	H2034
17	LUG 203	LUG, SOLDER	83330	1497	1	E0137
19	LUG 202	LUG, SOLDER #6	73734	1955	1	E0118
21		CONNECTOR, COVER: BNC, plastic	97945	1704-9	2	09063020
23		SCREW, PAN HEAD MACHINE: 6-32 X 5/16	MIL	MS51957-27	1	H1281
25		TIE, PLASTIC CABLE	06383	SSTIM	A/R	H1104

CIRCUIT DESCRIPTION
OPTION 10, AC CONVERTER (rms)
FINAL ASSEMBLY #037734

The Option 10 AC Converter (rms) provides the Model 7110A Digital Multimeter with a true rms ac measurement capability. With this option, high-accuracy ac measurements of noise levels or distorted and complex waveforms may be made. This option consists of a single A9, AC Converter (rms) P.C. assembly board inserted in the A9 position on the A10 Analog Board and a new Guard/Calibration Cover installed. The averaging converter, A9, AC Converter, board, if in the unit, must be removed.

SPECIFICATIONS:

Ranges:	1, 10, 100, 1000 VAC.
Overrange:	30% except on 1000 VAC range.
Resolution:	0.001% range.
Overload:	750 V rms.
Superimposed dc:	1000 V dc (peak ac + dc may not exceed 1000 V.)
Maximum Crest Factor: (peak V/rms V)	7 at full scale and increasing down scale per: 7 X (V Range/V Input).
Input Impedance	1 MΩ shunted by 70 pF (120 pF with Option 08 Rear Input).
Accuracy:	Range 0.001 V to 1000 V:
	dc + 50 Hz to 10 kHz → ±0.1% Input ±0.05% Range,
	dc + 10 kHz to 20 kHz → ±0.3% Input ±0.2% Range,
	dc + 20 kHz to 100 kHz → ±1% Input ±0.5% Range,
	dc + 100 kHz to 300 kHz → ±3% Input ±0.5% Range,
	for 90 days from 18° C to 28° C.

Note: a) The customer must supply an input capacitor (approximately .1 μF, 1.2 kV) if the ac component only is to be measured.

b) The product of the input voltage and frequency ($E_{in} \cdot f$) should not exceed 2×10^7 V Hz.

Temperature Coefficients:	dc + 50 Hz to 10 kHz → (±0.015% Input ±0.004% Range)/°C from 0 to 18°C and 28 to 50°C.
Settling Time:	1 second to full scale, any range at specified accuracy.

CIRCUIT DESCRIPTION:

Option 10, A9, AC Converter changes an ac voltage to a dc voltage proportional to the rms value of the ac voltage. To accomplish the conversion, the A9, AC Converter P.C. board utilizes a switch selectable input attenuator, an input operational amplifier, and a true rms converter module.

When AC is selected, the HI input connector of the instrument is connected to the input of the AC Converter board on pin 15 & S. For the 10 V, 100 V, or 1000 V ranges, control signals turn on relays and close switches A9S1, A9S2, or A9S3 through a magnetic field generated by A9L1, A9L2, or A9L3. A9CR3, A9CR4, and A9CR5 are used to bleed the collapsing coil fields. All switches are open for the 1 V range. When one of these switches is closed, A9R9, in series with A9R1 as a ÷ 2 network, is shunted by a resistor-capacitor combination which increases the attenuation of the input by a factor of 10, 100, or 1000 for a total of 20, 200, or 2000 attenuation factor. No switches are needed for the X1 attenuation position or a factor-of-2 total attenuation. Overload protection is provided by diodes A9CR1 and A9CR2.

A9U1 is a gain-of-2 operational amplifier with a high-input impedance providing light loading on the input attenuator and a low output impedance for driving the following ac converter stage.

A9U2 is an rms ac-to-dc voltage converter module. The output dc voltage Vo at pin 5 & E for an input voltage Vi to the module A9U2 on pin 25 is given by the following relationship:

$$Vo = [1/p \int_o^p (Vi(t))^2 dt)]^{1/2}, \text{ where } p = \text{period}$$

t = pulse width time.

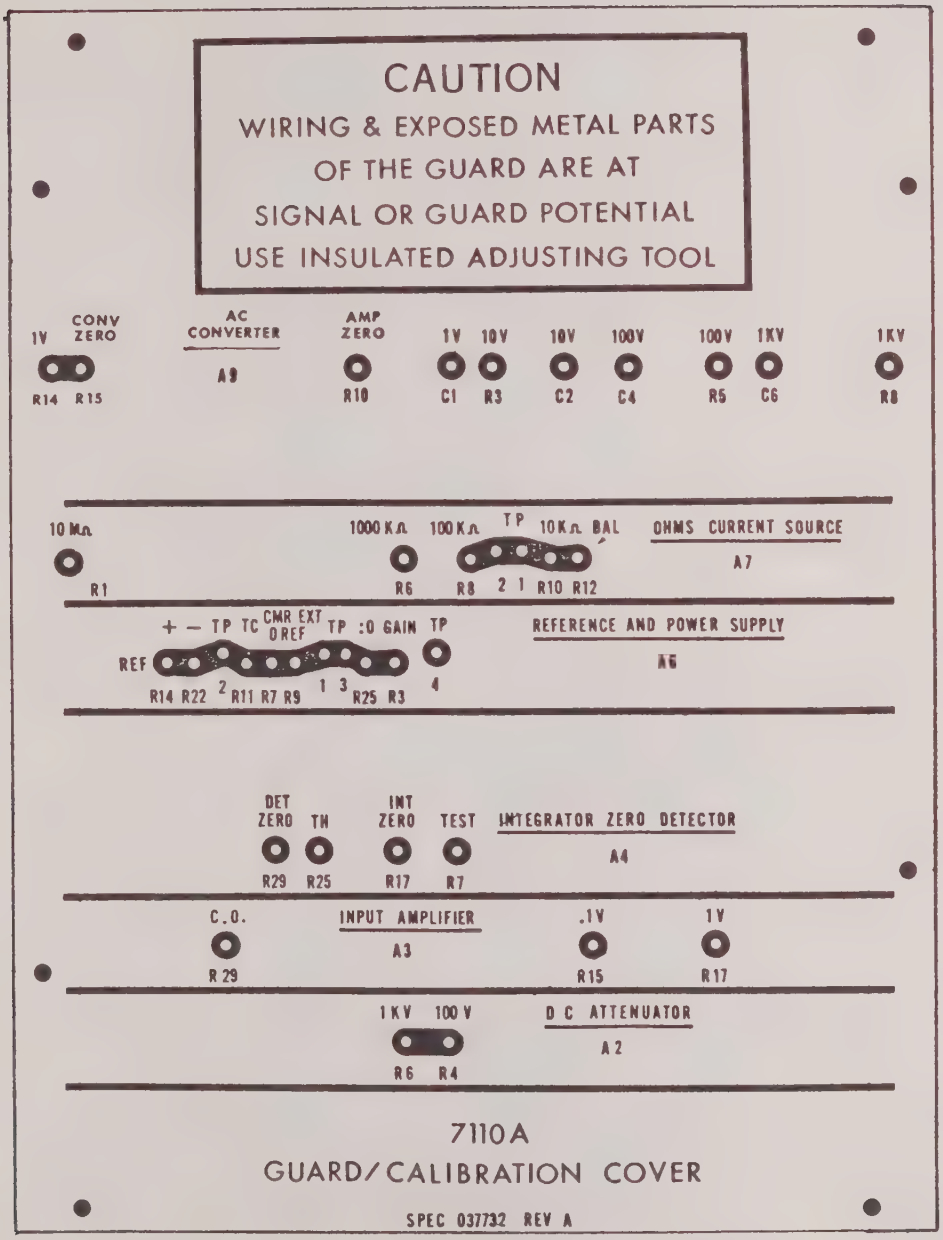

OPTION 10, GUARD/CALIBRATION COVER ASSEMBLY #037732 REV A

REPLACEABLE PARTS LIST

Equipment/Assembly Designation OPT 10, AC CONVERTER FINAL ASSEMBLY #037734

(1) Reference Designation	(2) Name of Component and Description	(3) Mfr's Code	(4) Manufacturer's Part Number	(5) No. Times Used	(6) Remarks/ SD Stock No.
	DELETE THE FOLLOWING:				
037196	ASSEMBLY, A9, AC CONVERTER			1	
037639	COVER, GUARD/CALIBRATION			1	
	ADD THE FOLLOWING:				
A9	ASSEMBLY, AC CONVERTER	06811	03764201	1	03764201
	COVER, GUARD/CALIBRATION	06811	037732	1	037732
	NAME PLATE	06811	023456	1	023456

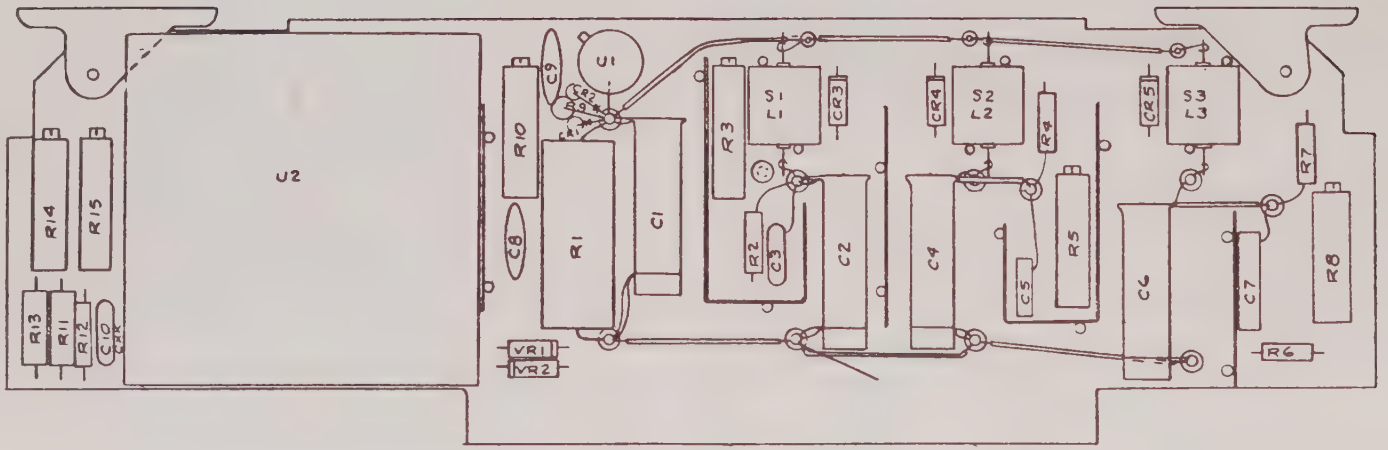

OPTION 10, A9, AC CONVERTER ASSEMBLY #0364201 REV 2

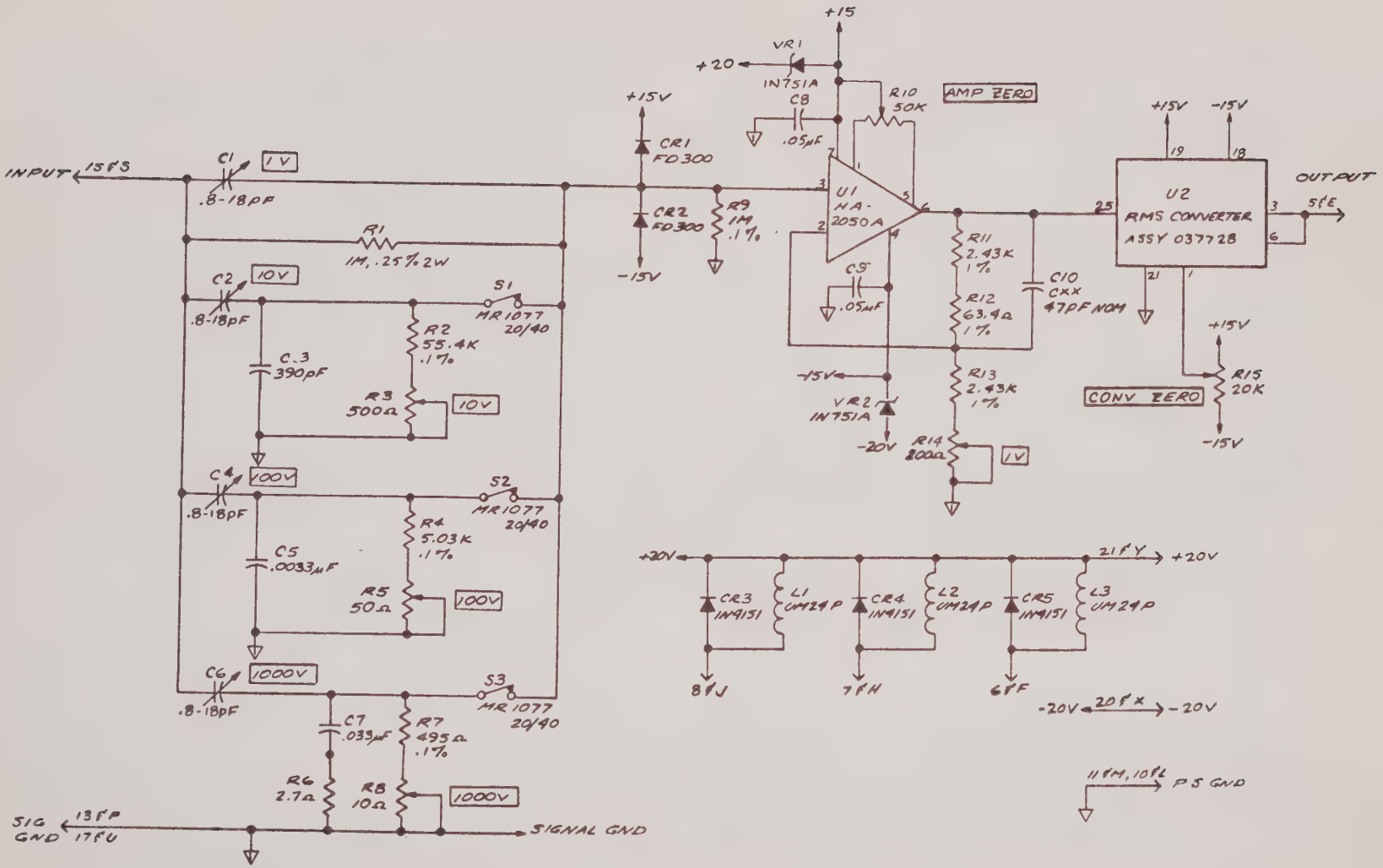

OPTION 10, A9, AC CONVERTER SCHEMATIC #7-03764201 REV 2

REPLACEABLE PARTS LIST

Equipment/Assembly Designation OPT 10, A9, AC CONVERTER ASSEMBLY #03764201

(1) Reference Designation	(2) Name of Component and Description	(3) Mfr's Code	(4) Manufacturer's Part Number	(5) No. Times Used	(6) Remarks/ SD Stock No.
	P.C. BOARD, A.C. CONVERTER	06811	037642	1	037642
A9C1	CAPACITOR, VARIABLE GLASS: .8-18 µF, P.C. mt.	73899	VC32GWY	4	C0555
A9C2	CAPACITOR, VARIABLE GLASS: .8-18 µF, P.C. mt.	73899	VC32GWY	4	C0555
A9C3	CAPACITOR, MICA: 390 pF ±5%, 500 Vdcw	72136	DM15FD391J0	1	C0871
A9C4	CAPACITOR, VARIABLE GLASS: .8-18 µF, P.C. mt.	73899	VC32GWY	4	C0555
A9C5	CAPACITOR, MOLDED: 3300 pF ±10%, 100 Vdcw, 30 PPM	16546	C37A332K	1	C1339
A9C6	CAPACITOR, VARIABLE GLASS: .8-18 µF, P.C. mt.	73899	VC32GWY	4	C0555
A9C7	CAPACITOR, MOLDED: .033 µF ±10%, 100 Vdcw, 30 PPM	16546	C37A333K	1	C1338
A9C8	CAPACITOR, CERAMIC: .05 µF +80-20%, 50 Vdcw	56289	TGS50	2	C0708
A9C9	CAPACITOR, CERAMIC: .05 µF +80-20%, 50 Vdcw	56289	TGS50	2	C0708
A9C10	CAPACITOR, MICA: Factory select, 47 pF ±5%, 500 Vdcw, crimp lead	72136	DM15ED470J0	1	C0533
A9CR1	SEMICONDUCTOR DEVICE, DIODE: Silicon, 125 Vdcw, high conduction	13715	FD300	2	26012320

REPLACEABLE PARTS LIST

Equipment/Assembly Designation: OPT 10, A9, AC CONVERTER ASSEMBLY #03764201 (Cont'd)

(1) Reference Designation	(2) Name of Component and Description	(3) Mfr's Code	(4) Manufacturer's Part Number	(5) No. Times Used	(6) Remarks/ SD Stock No.
A9CR2	SEMICONDUCTOR DEVICE, DIODE: Silicon, 125 Vdcw, high condition	13715	FD300	2	26012320
A9CR3	SEMICONDUCTOR DEVICE, DIODE: Silicon, 50 Vdcw, 150 mA	03508	1N4151	3	CR0150
A9CR4	SEMICONDUCTOR DEVICE, DIODE: Silicon, 50 Vdcw, 150 mA	03508	1N4151	3	CR0150
A9CR5	SEMICONDUCTOR DEVICE, DIODE: Silicon, 50 Vdcw, 150 mA	03508	1N4151	3	CR0150
A9L1	COIL, REED: 24 Vdcw	71707	UM-24-P	3	L0175
A9L2	COIL, REED: 24 Vdcw	71707	UM-24-P	3	L0175
A9L3	COIL, REED: 24 Vdcw	71707	UM-24-P	3	L0175
A9R1	RESISTOR, METAL FILM: 100 MΩ ±25%, 2 W, 25 PPM	24223	9850-2A	1	R2714
A9R2	RESISTOR, METAL FILM: 55.4 Ω ±1%, .12 W, 25 PPM	03888	PME60T9	1	R2532
A9R3	RESISTOR, POTENTIOMETER, CERAMIC: 500 Ω ±10%, 3/8 W, 15-turn, P.C. mt., end adjust	73138	89PR500	1	R2821
A9R4	RESISTOR, METAL FILM: 5.03 kΩ ±1%, .12 W, 25 PPM	03888	PME60T9	1	R2530
A9R5	RESISTOR, METAL FILM: 8.06 kΩ ±1%, .12 W, 100 PPM	19701	MF5C-D-8061-F	1	R2872
A9R6	RESISTOR, COMP: 2.7 Ω ±5%, 1/4 W	01121	CB27G5	1	R1697

REPLACEABLE PARTS LIST

Equipment/Assembly Designation OPT 10, A9, AC CONVERTER ASSEMBLY #03764201 (Cont'd)

(1) Reference Designation	(2) Name of Component and Description	(3) Mfr's Code	(4) Manufacturer's Part Number	(5) No. Times Used	(6) Remarks/ SD Stock No.
A9R7	RESISTOR, METAL FILM: 495 Ω ±1%, .12 W, 25 PPM	03888	PME60T9	1	R2528
A9R8	RESISTOR, POTENTIOMETER, W/SWITCH: 1.2 MΩ, W/SPDT, CCW, W1P, SW CW	06811	/CTS VF-45/	1	R2786
A9R9	RESISTOR, METAL FILM: 1.00 MΩ ±1%, .12 W, 25 PPM	03888	PME60T9	1	R2533
A9R10	RESISTOR, POTENTIOMETER, CERAMIC: 50 kΩ ±10%, 3/8 W, 15-turn, end adjust	73138	89PR50K	1	R2783
A9R11	RESISTOR, METAL FILM: 2.3 kΩ ±1%, .12 W, 25 PPM	19701	MF5C-E-2431-F	2	R2510
A9R12	RESISTOR, METAL FILM: 63.4 Ω ±1%, .12 W, 100 PPM	19701	MF5C-D-63R4-F	1	R2741
A9R13	RESISTOR, METAL FILM: 2.3 kΩ ±1%, .12 W, 25 PPM	19701	MF5C-E-2431-F	2	R2510
A9R14	RESISTOR, POTENTIOMETER, CERAMIC: 200 Ω ±10%, 3/8 W, 15-turn, P.C. mt., end adjust	73138	89PR200	1	R2722
A9R15	RESISTOR, POTENTIOMETER, CERAMIC: 20 kΩ ±10%, 3/8 W, 15-turn, P.C. mt., end adjust	73138	89PR20K	1	01111100
A9S1	SWITCH, REED: .25 A, 28 Vdcw	95348	MR-107720-40AT	3	S0400
A9S2	SWITCH, REED: .25 A, 28 Vdcw	95348	MR-107720-40AT	3	S0400
A9S3	SWITCH, REED: .25 A, 28 Vdcw				
A9VR1	SEMICONDUCTOR DEVICE, DIODE, ZENER: 5.1 Vdcw, ±5%, .4 W	03877	1N751A	2	CR0095

REPLACEABLE PARTS LIST

Equipment/Assembly Designation OPT 10, A9, AC CONVERTER ASSEMBLY #03764201 (Cont'd)

(1) Reference Designation	(2) Name of Component and Description	(3) Mfr's Code	(4) Manufacturer's Part Number	(5) No. Times Used	(6) Remarks/ SD Stock No.
A9U1	INTEGRATED CIRCUIT: Operational amplifier, FET input, 20 MHz	34371	HA-2050A	1	045250
A9U2	ASSEMBLY, RMS CONVERTER	06811	037728	1	037728
	SHIELD, COIL	06811	037626	3	037626
	SHIELD, REED, SMALL	06811	037644	3	037644
	RMS CONVERTER: 1 V RMS to 1 V DC, 50 Hz-300 kHz				
	FOIL CAL	06811	037729		037729
	SHIELD SET	06811	037643	1	037643
	CONNECTOR, PIN: Receptacle, single male post, 10-inch	00779	86090-4	17	E0322
	TERMINAL: Press, large, insulated	71279	4034-3-0519	10	51024460
	TERMINAL: Press, small insulated	98921	004-1007	3	E0333
	TERMINAL: Feed thru, insulated	98921	011-2023	1	E0315
	EXTRACTOR, P.C., PLAIN	51495	1743	1	H1743
	EXTRACTOR, P.C., HOT STAMP	06811	039842-9	1	039842-9

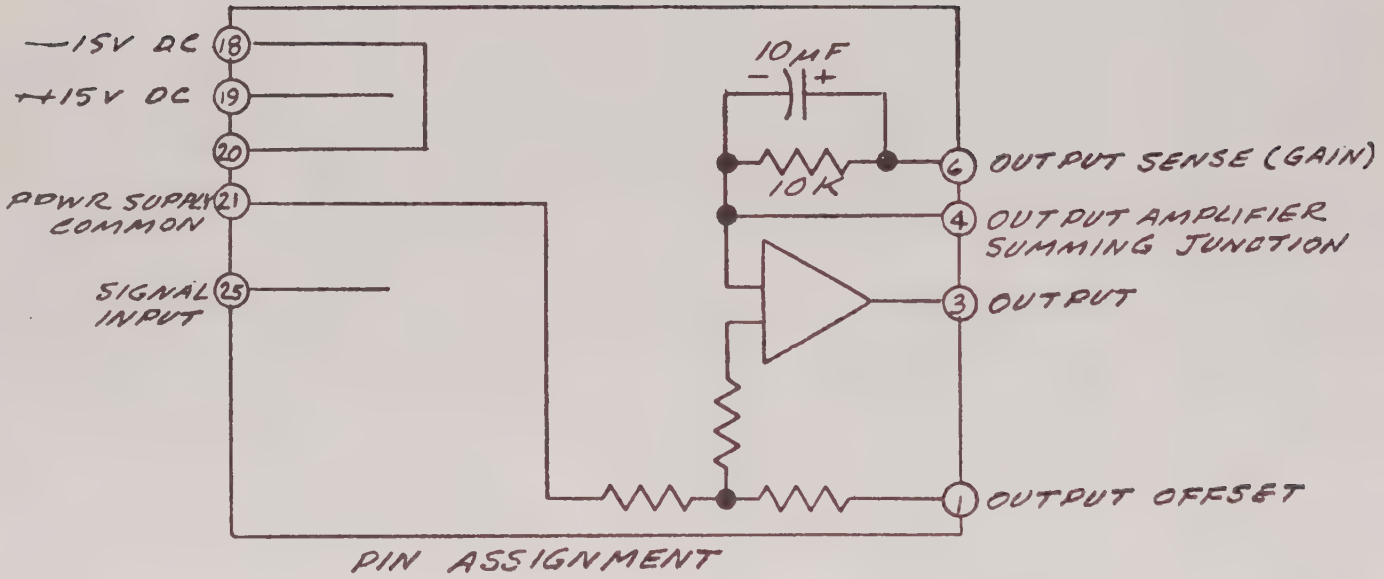

OPTION 10, RMS TO DC CONVERTER MODULE ASSEMBLY #037730 REV 1

CIRCUIT DESCRIPTION
OPTION 301 or 302, A17, REMOTE PROGRAM
FINAL ASSEMBLY #037483-4-1

This option provides for the remote selection of all RANGE, FUNCTION, and FILTER operations. Depress the POWER and REMOTE pushbuttons on the front panel and select the desired SAMPLE RATE. Remote selection may then be made through input buffers, A17U1, and NAND gate, A17U3. Either negative true or positive true logic may be used. When using positive true logic, switch A17S1 must be placed in the positive position and solid wire jumpers placed in the input buffers.

Since all the input circuits operate in the same manner, only one circuit, $\overline{\text{VAC}}$, will be discussed. Depressing the REMOTE pushbutton completes the common ground circuit. The low into amplifier A17U3, pins 1, 2, 4 and 5, drives the output high, enabling NAND gates A17U4, A17U4, A17U5, and A17U6. The ground true $\overline{\text{VAC}}$ signal applied to pin 5, J208, drives the output of amplifier A17U1 high. This high, applied to A17U4 pin 10, with the high from amplifier A17U3 pin 6 applied to A17U4 pin 9, drives A17U4 pin 8 low. If positive true logic were being used, the input signal would be wired directly to input pin 10 of A17U4.

When operating the DMM from the local position, remote operation is inhibited by the interlocked switch arrangement. The remote common line is opened, the high applied to pins 1, 2, 4 and 5 of amplifier A17U3 drives the output low, inhibiting NAND gates A17U4, A17U5, and A17U6.

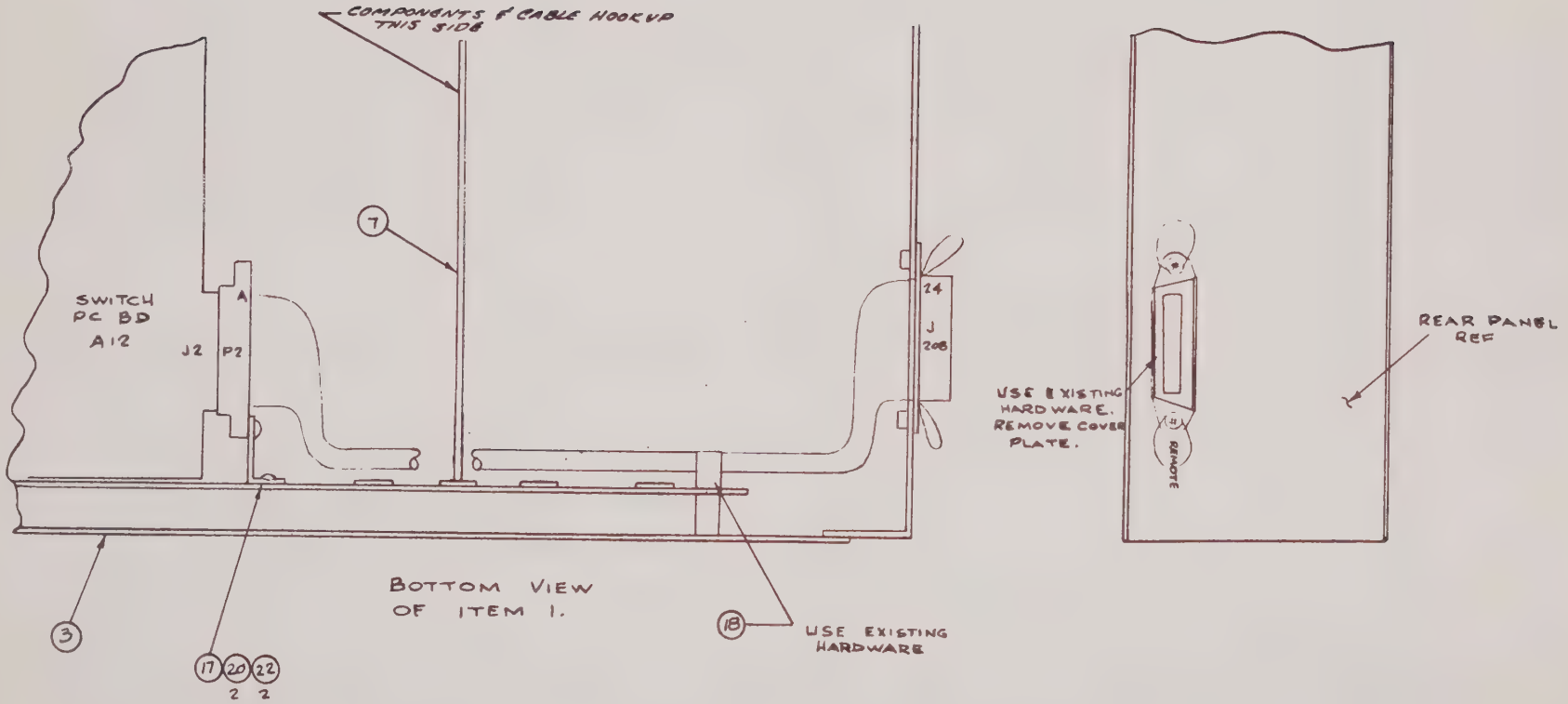

OPTION 301, 302, REMOTE PROGRAM ASSEMBLY #037483-4-1 REV A

REPLACEABLE PARTS LIST

Equipment/Assembly Designation: OPT 301 & 302, REMOTE PROGRAM ASSEMBLY #037483-4-1

(1) Reference Designation		(2) Name of Component and Description	(3) Mfr's Code	(4) Manufacturer's Part Number	(5) No. Times Used	(6) Remarks/ SD Stock No.
ITEM	REF					
1		ASSEMBLY, REMOTE PROGRAM 301 or 302	06811	037483-4-1		037483-4-1
7		ASSEMBLY, CABLE HOOK-UP	06811	037483-3-1	1	037483-3-1
9	A17	ASSEMBLY, REMOTE PROGRAM	06811	037479-4-1	1	037479-4-1
11		ASSEMBLY, REMOTE CABLE P2-A17	06811	037480-3-1	1	037480-3-1
12		CONNECTOR: R.F. receptacle, front mt., BNC	MIL	UG-1094/U	1	J0165
14		ASSEMBLY, REMOTE CABLE A17-J208	06811	037481-3-1	1	037481-3-1
15		CONNECTOR: 24-pin, female	02660	57-40240	1	J0298
17		BRACKET, REMOTE CONNECTOR	06811	037170-1-1	1	037170-1-1
18		CLAMP, CABLE	95987	1/4-4NA	1	H0789
20		SCREW, PAN HEAD MACHINE: 4-40 X 5/16	MIL	MS51957-14	2	H1273
22		WASHER: Split-lock #4	MIL	MS35338-135	2	H0782
24	P208	CONNECTOR: 24-pin, male plug	02660	57-30240	1	J0244

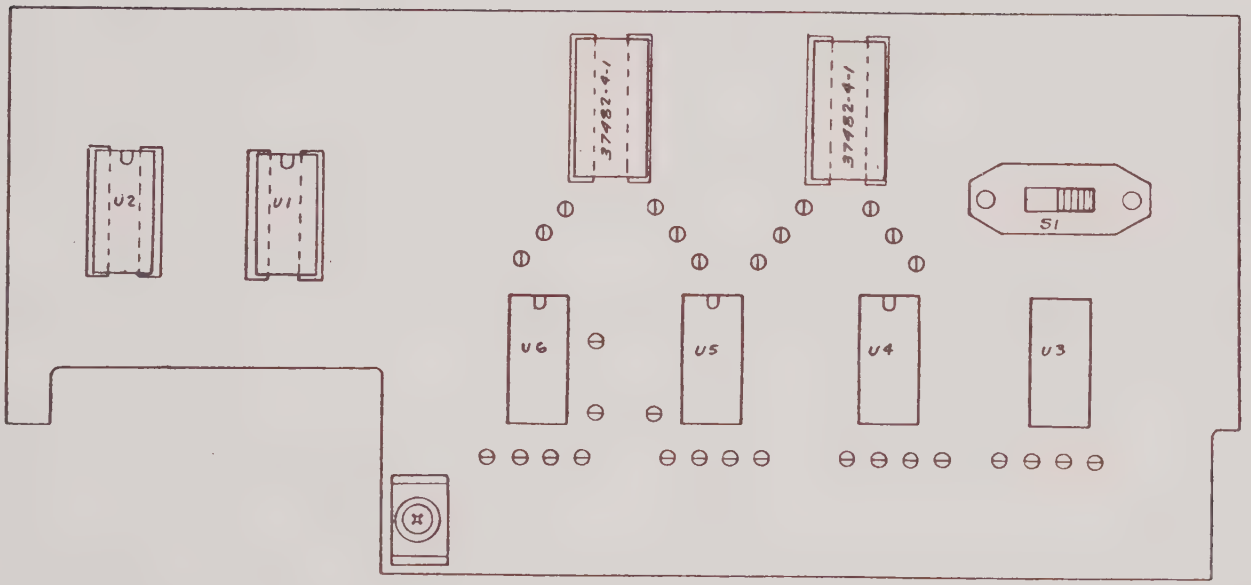

OPTION 301, 302, A17, REMOTE PROGRAM ASSEMBLY #037479-4-1 REV B

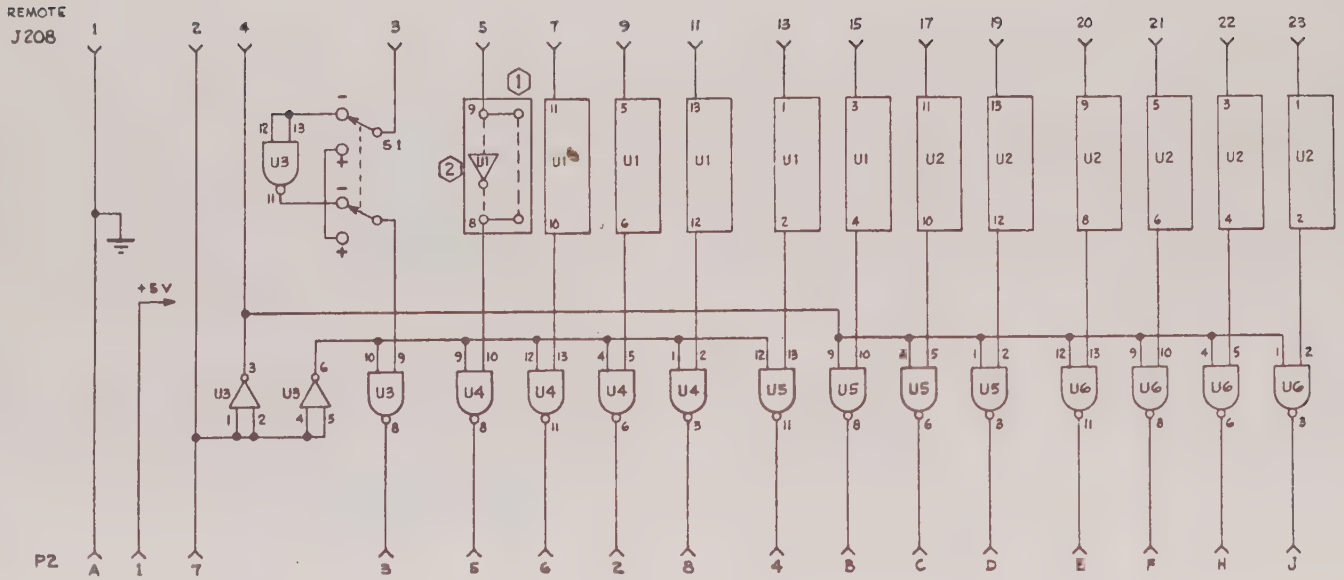

(1) FOR POSITIVE TRUE LOGIC INPUT, USE SOLID CONNECTION IN THESE POSITIONS AS PROVIDED BY JUMPER PLUGS No. 37482-4-1 .

(2) FOR NEGATIVE TRUE LOGIC INPUT, USE HEX INVERTER ELEMENT (SN15B3GN); SD STK No. 25704, IN EACH OF THE POSITIONS U1 & U2 .

3. SWITCH S1 FOR NEG. OR POS. TRUE LOGIC INPUT .

4. U3 - U6 ARE SN15846N .

OPTION 301, 302, A17, REMOTE PROGRAM SCHEMATIC #037479-7-1 REV A

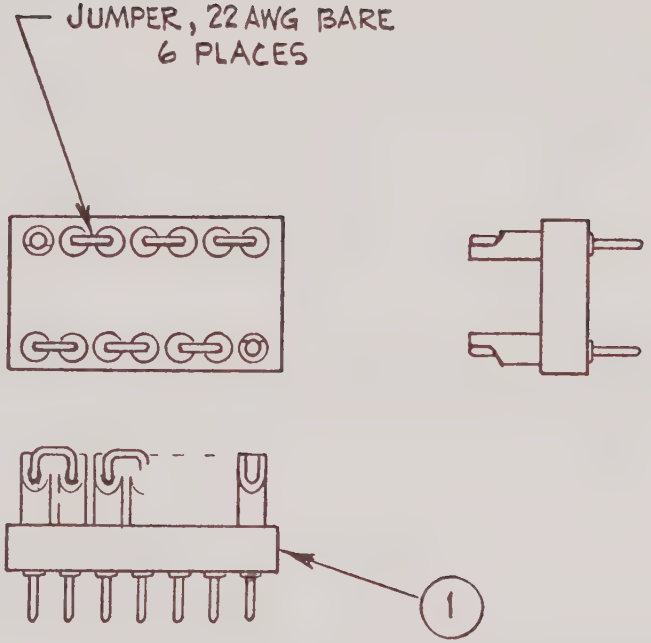

OPTION 301, 302, A17, JUMPER PLUG ASSEMBLY #037482-4-1 REV A

REPLACEABLE PARTS LIST

Equipment/Assembly Designation OPT 301 & 302, A17, REMOTE PROGRAM #037479-4-1

(1) Reference Designation	(2) Name of Component and Description	(3) Mfr's Code	(4) Manufacturer's Part Number	(5) No. Times Used	(6) Remarks/ SD Stock No.
	P.C. BOARD, REMOTE PROGRAM	06811	037479-1-1	1	037479-1-1
A17U1	INTEGRATED CIRCUIT: Hex inverter, 6 kΩ pullups, DTL	04713	MC836P	2	025704
A17U2	INTEGRATED CIRCUIT: Hex inverter, 6 kΩ pullups, DTL	04713	MC836P	2	025704
A17U3	INTEGRATED CIRCUIT: Quad 2-input NAND gate, DTL	01295	SN15846N	4	019716
A17U4	INTEGRATED CIRCUIT: Quad 2-input NAND gate, DTL	01295	SN15846N	4	019716
A17U5	INTEGRATED CIRCUIT: Quad 2-input NAND gate, DTL	01295	SN15846N	4	019716
A17U6	INTEGRATED CIRCUIT: Quad 2-input NAND gate, DTL	01295	SN15846N	4	019716
A17S1	SWITCH, SLIDE: .5 A, 125 VAC	79727	GF-126-DPDT	1	S0362
	INSULATOR	06811	039466-4	8	039466-4
	SOCKET, IC: 7-pin	27264	1938-4B-7	8	X0184
	ASSEMBLY, JUMPER PLUG	06811	037482-4-1	2	037482-4-1
	CONNECTOR: 14-pin, male plug	91506	614-BG1	2	J0605
	TERMINAL: Swage bifurcated	88245	2000B	31	E0100
	CABLE, ANCHOR #4	06811	37021750	1	37021750
	SCREW, PAN HEAD MACHINE: 4-40 X 5/16	MIL	MS51957-14	1	H1273
	WASHER: Flat #4	MIL	MS15795-803	1	H0758
	NUT: Kep 4-40	78189	511-041800-00	1	H1872

CIRCUIT DESCRIPTION
OPTION 303, REMOTE PROGRAMMING

Option 303 provides remote program control by 8-4-2-1 BCD and program storage register. Allows DTL/TTL compatible 8-4-2-1 parallel BCD control of remote programming lines to Model 7110A. Requires 3-bit word for FUNCTION control and separate 3-bit word for RANGE control. Remote control of front panel REMOTE selector is not provided.

Internal storage register allows BCD data to be "strobed" into the Model 7110A for storage and then commands removal. This is especially useful when programming is being controlled by computer among various instruments on a time-shared basis. Register holds data until cleared by an external "clear" pulse, resets automatically, and is made ready to take new data.

Programming lines can be "called" at either the "1" or "0" states as specified by the customer. "Clear" pulse can either be at "1" or "0" state as specified by the customer. Programming lines must be energized for at least 1 μs for storage feature. "Clear" pulse must be at least 1 μs wide. Rise and fall times should not exceed 20% of total time width of pulses. Storage feature can be disabled, eliminating need for "clear" pulse when storage is not desired. This option must be accompanied by Option 06.

CIRCUIT DESCRIPTION
OPTION 304, INVERTED BCD

Option 304 provides inverted BCD data output per Option 05 but levels are inverted. This option must be accompanied by Option 05.

CIRCUIT DESCRIPTION
OPTION 305, BCD 4-2-2-1 OUTPUT, A13, A14

BCD data output code changed to 4-2-2-1. Standard code is 8-4-2-1. All other specifications are per Option 05 data sheet. This option must be accompanied by Option 05.

DECIMAL TO 4-2-2-1 OUTPUT CODE

Decimal	4	2^2	2^1	1
0				
1				x
2			x	
3			x	x
4		x	x	
5		x	x	x
6	x	x		
7	x	x		x
8	x	x	x	
9	x	x	x	x

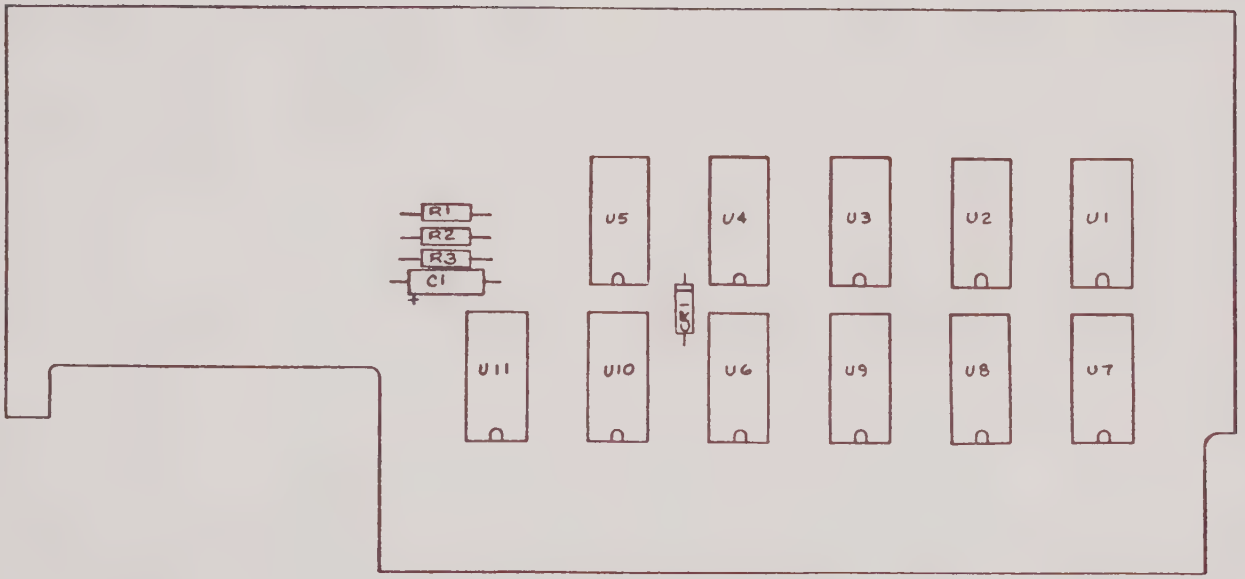

OPTION 305, A13, BCD 4-2-2-1 OUTPUT ASSEMBLY #037216-4-1 REV A

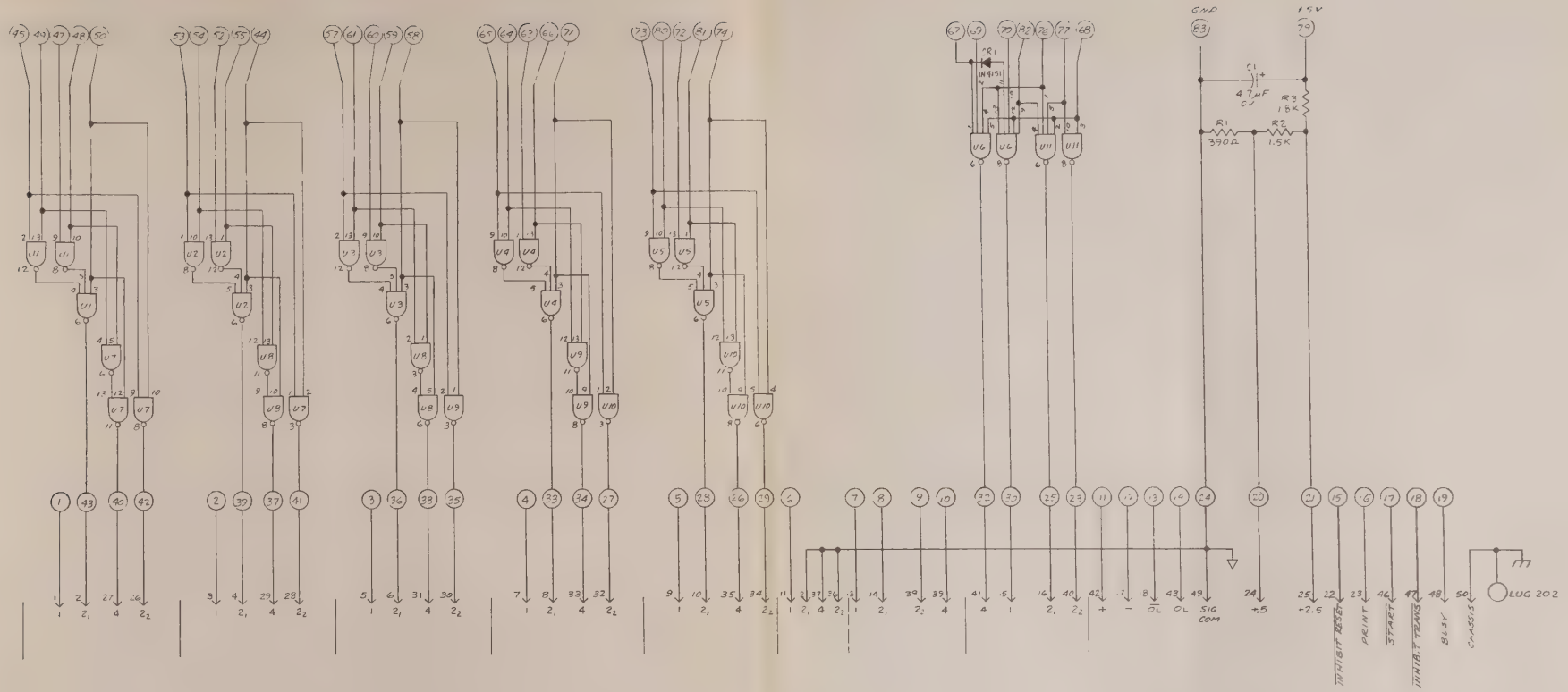

OPTION 305, A13, BCD 4-2-2-1
OUTPUT SCHEMATIC #037216-7-1
REV A

REPLACEABLE PARTS LIST

Equipment/Assembly Designation: OPT 305, A13, BCD ASSEMBLY #037216-4-1

(1) Reference Designation	(2) Name of Component and Description	(3) Mfr's Code	(4) Manufacturer's Part Number	(5) No. Times Used	(6) Remarks/ SD Stock No.
	P.C. BOARD , 4-2-2-1, BCD	06811	037216-1-1	1	037216-1-1
A13J07	ASSEMBLY, 4-2-2-1 BCD CABLE	06811	037216-3-1	1	037216-3-1
	CONNECTOR: 50-pin, male plug	02660	57-30500	1	J0171
A13C1	CAPACITOR, TANT: 4.7 µF ±10%, 10 Vdcw	56289	150D475X9010A2	1	C1011
A13CR1	SEMICONDUCTOR DEVICE, DIODE: Silicon, 50 Vdcw, 150 mA	03508	1N4151	1	CR0150
A13R1	RESISTOR, COMP: 390 Ω ±5%, 1/4 W	01121	CB3915	1	R0880
A13R2	RESISTOR, COMP: 1.5 kΩ ±5%, 1/4 W	01121	CB1525	1	R0783
A13R3	RESISTOR, COMP: 1.8 kΩ ±5%, 1/4 W	01121	CB1825	1	R0959
A13U1	INTEGRATED CIRCUIT: Triple 3-input, NAND gate, DTL	01295	SN15862N	5	019719
A13U2	INTEGRATED CIRCUIT: Triple 3-input, NAND gate, DTL	01295	SN15862N	5	019719
A13U3	INTEGRATED CIRCUIT: Triple 3-input, NAND gate, DTL	01295	SN15862N	5	019719
A13U4	INTEGRATED CIRCUIT: Triple 3-input, NAND gate, DTL	01295	SN15862N	5	019719

REPLACEABLE PARTS LIST

Equipment/Assembly Designation: OPT 305, A13, BCD ASSEMBLY #037216-4-1 (Cont'd)

(1) Reference Designation	(2) Name of Component and Description	(3) Mfr's Code	(4) Manufacturer's Part Number	(5) No. Times Used	(6) Remarks/ SD Stock No.
A13U5	INTEGRATED CIRCUIT: Triple 3-input, NAND gate, DTL	01295	SN15862N	5	019719
A13U6	INTEGRATED CIRCUIT: Dual 4-input, NAND gate, DTL	01295	SN15830N	2	019712
A13U7	INTEGRATED CIRCUIT: Quad 2-input, NAND gate, DTL	01295	SN15846N	4	019716
A13U8	INTEGRATED CIRCUIT: Quad 2-input, NAND gate, DTL	01295	SN15846N	4	019716
A13U9	INTEGRATED CIRCUIT: Quad 2-input, NAND gate, DTL	01295	SN15846N	4	019716
A13U10	INTEGRATED CIRCUIT: Quad 2-input, NAND gate, DTL	01295	SN15846N	4	019716
A13U11	INTEGRATED CIRCUIT: Dual 4-input, NAND gate, DTL	01295	SN15830N	2	019712
	TIE, CABLE: Nylon	06383	SST1M	2	H1104
	TIE, CABLE ANCHOR		TM-1S6	2	37021790
	SCREW, PAN HEAD MACHINE: 6-32 X 1/4	MIL	MS51957-26	2	H0986
	WASHER: Split-lock #6	MIL	MS35338-136	2	H0783
	NUT: Hex, 6-32	MIL	NAS671C6	2	H0380

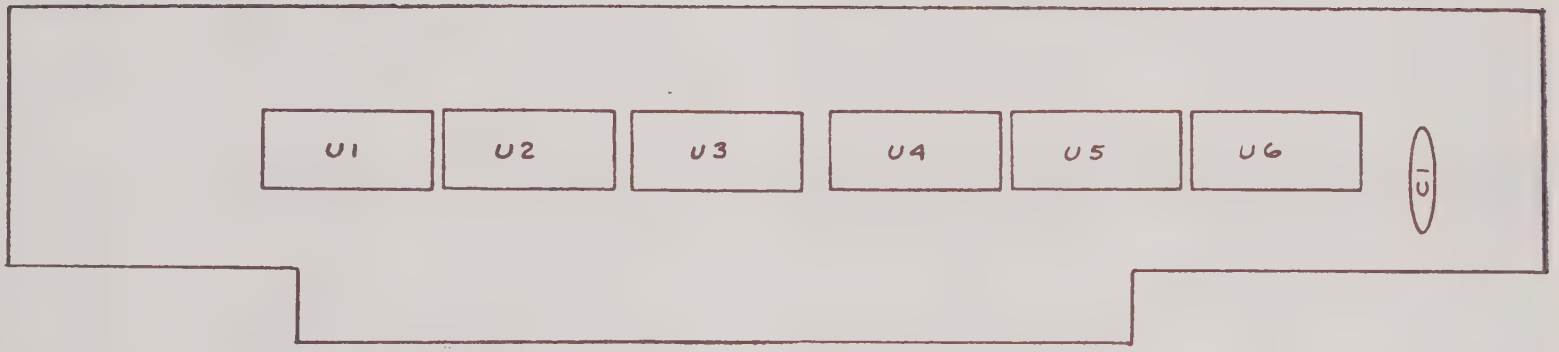

OPTION 305, A14, BCD CONNECTOR ASSEMBLY #037240-4-1 REV A

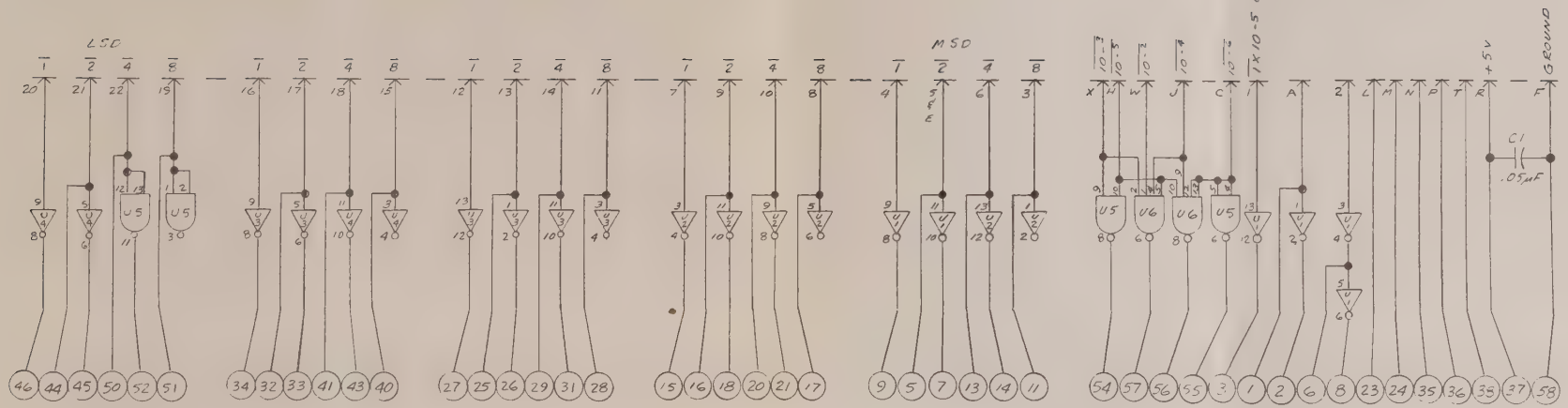

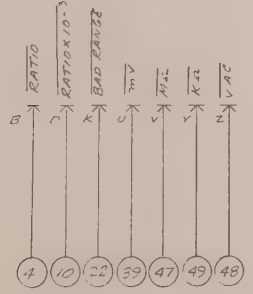

NOTE

1. U1, U2, U3 & U4 ARE SN15836N
   U5 IS SN15896N, U6 IS SN15830N.
   PIN 7 IS GROUND, PIN 14 IS +5V

OPTION 305, A14 BCD
CONNECTOR SCHEMATIC #037240-7-1
REV A

REPLACEABLE PARTS LIST

Equipment/Assembly Designation: OPT 305, A14, BCD CONNECTOR ASSEMBLY #037240-4-1

(1) Reference Designation	(2) Name of Component and Description	(3) Mfr's Code	(4) Manufacturer's Part Number	(5) No. Times Used	(6) Remarks/ SD Stock No.
	P.C. BOARD, BCD CONNECTOR	06811	037240-1-1	1	037240-1-1
	ASSEMBLY, BCD CONNECTOR BOARD CABLE	06811	037240-3-1	1	037240-3-1
A14C1	CAPACITOR, CERAMIC: .05 µF +80-20%, 10 Vdcw	71590	UK10-503	1	C0672
A14U1	INTEGRATED CIRCUIT: Hex inverter, 6 kΩ pullups, DTL	04713	MC836P	4	025704
A14U2	INTEGRATED CIRCUIT: Hex inverter, 6 kΩ pullups, DTL	04713	MC836P	4	025704
A14U3	INTEGRATED CIRCUIT: Hex inverter, 6 kΩ pullups, DTL	04713	MC836P	4	025704
A14U4	INTEGRATED CIRCUIT: Hex inverter, 6 kΩ pullups, DTL	04713	MC836P	4	025704
A14U5	INTEGRATED CIRCUIT: Quad 2-input NAND gate, DTL	01295	SN15846N	1	019716
A14U6	INTEGRATED CIRCUIT: Dual 4-input NAND gate, DTL	01295	SN15830N	1	019712
	TIE, CABLE ANCHOR	06811	037021790	1	037021790
	SCREW, PAN HEAD MACHINE: 6-32 X 1/4	MIL	MS51957-26	1	H0986
	WASHER: #6 split-lock	MIL	MS35338-136	1	H0783
	NUT: 6-32 Hex	MIL	NAS671C6	1	H0380
	TIE, CABLE: Nylon	06383	SST1M	1	H1104

ACCESSORIES

This section includes standard accessories:

100/200 V Modification
Cable Model 7110A to HP 5050B
P.C. Board Extender
3-1/2" Full Rack Assembly

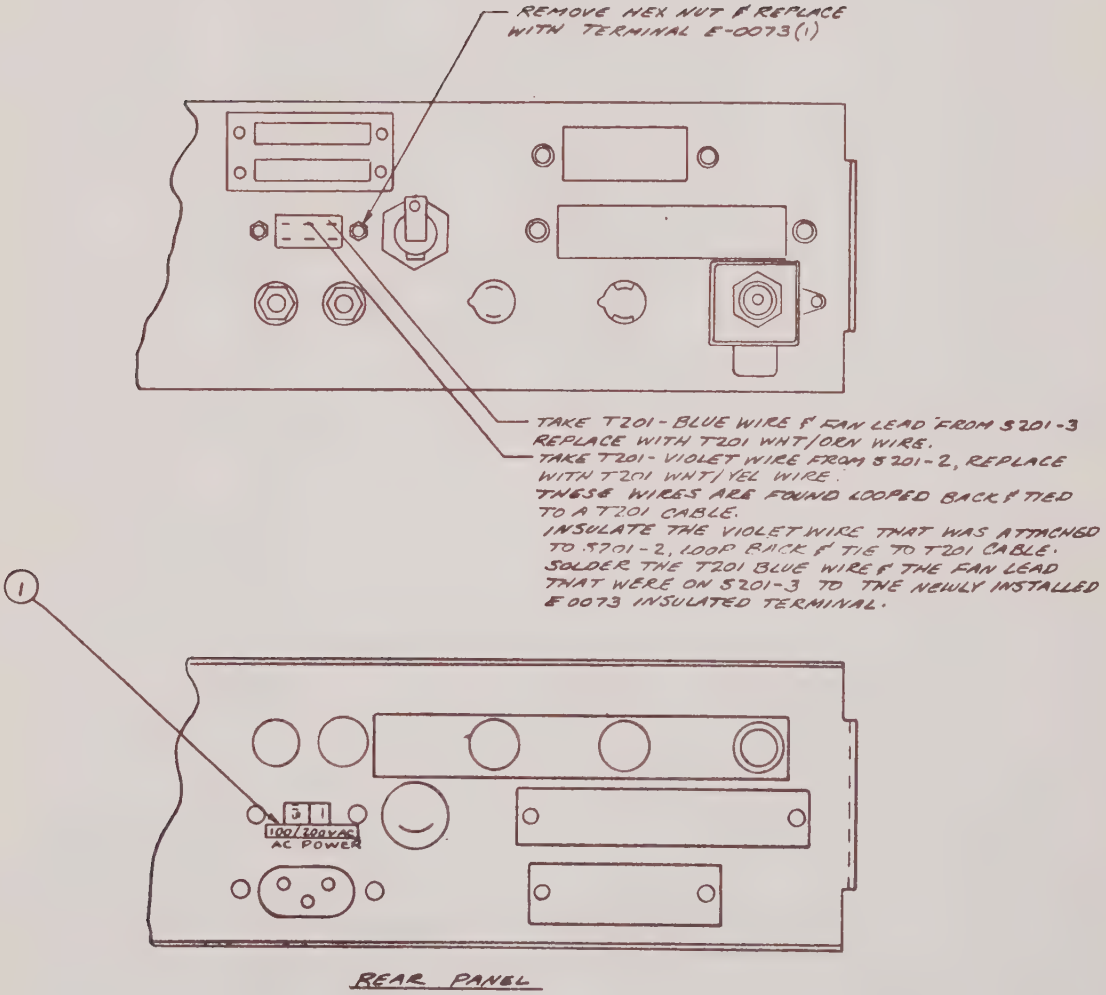

100/200 VAC MODIFICATION ASSEMBLY #037550-4-1 REV A

TABLE 6.4 REPLACEABLE PARTS LIST

Equipment/Assembly Designation: ACCESSORY, 100/200 VAC MODIFICATION #037550-4-1

(1) Reference Designation		(2) Name of Component and Description	(3) Mfr's Code	(4) Manufacturer's Part Number	(5) No. Times Used	(6) Remarks/ SD Stock No.
ITEM	REF					
1		SPECIFICATION: 100/200 VAC foil-cal	06811	037549-6-1	1	037549-6-1
2		TERMINAL, INSULATED	71279	3650-1	1	E0073

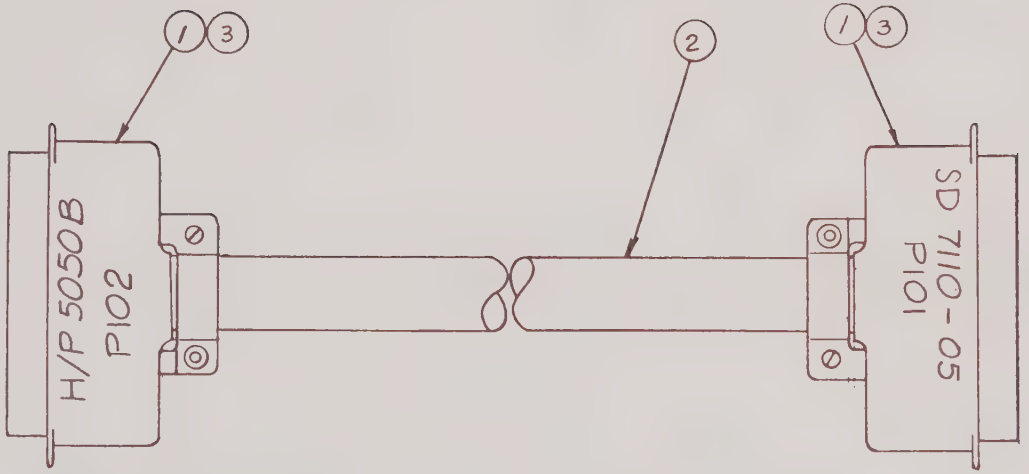

CABLE, MODEL 7110A TO HP 5050B ASSEMBLY #037528-4-1 REV B

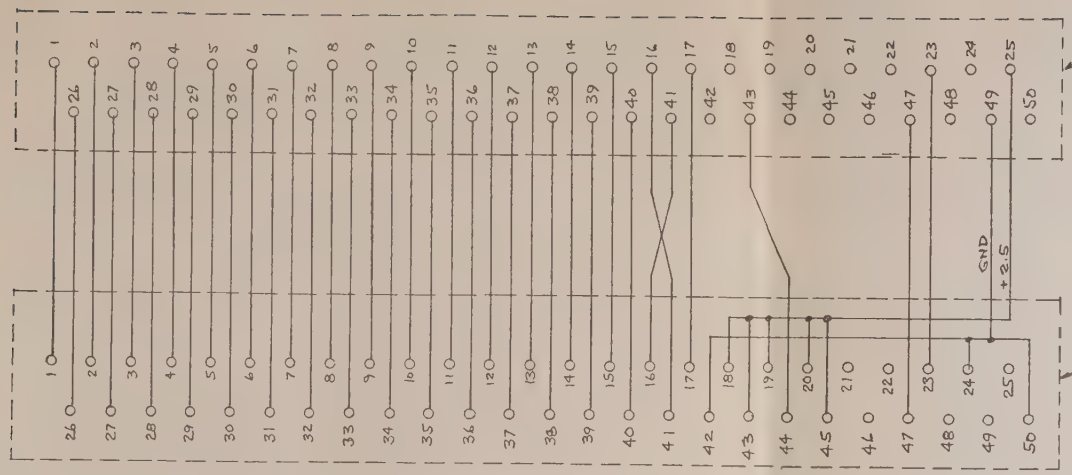

DATA COLUMN	1	2	3	4	5	6	7	8	9	10
PRINT COLUMN	4	5	6	7	8	9	2	1	10	3

GND, TRUE INHIBIT
POS. TRUE PRINT

7- THIS CABLE COUPLES AN S.D. 7110 EQUIPPED WITH OPTION 05 TO AN HP 5050 B WITH +1248 CODE WHEEL INSTALLED.

1- DATA COLUMNS 1 THRU 6 ARE NUMERICAL DATA FROM MODEL 7110-05 WITH LEAST SIGNIFICANT DATA IN COLUMN 1.

2- DATA COLUMN 7 HAS NEGATIVE EXPONENT (N) OF 10. MULTIPLY THE DATA NUMBER ABOVE BY 10^{-N} TO PLACE DECIMAL POINT IN THE DATA NUMBER.

3- DATA COLUMN 8 HAS NUMBERS ASSIGNED TO SHOW THE FUNCTIONS AS FOLLOWS: mVDC - 1, VDC - 2, VAC - 8, KΩ - 9, MΩ - 4, RATIO - 6, RATIO x 10^{-3} - 7, TEST OR NO FUNCTION - 0, BAD RANGE - *.

4- DATA COLUMN 9 HAS + AND - SIGN DATA TO SHOW POLARITY.

5- DATA COLUMN 10 HAS - TO PRECEDE EXPONENT IN NOTE 2 OR * TO SHOW WHEN NUMERICAL DATA IS OFF SCALE, ≥130000.

6- PRINT OUT FREQUENCY IS DETERMINED BY THE SETTING OF THE FRONT PANEL SAMPLE RATE CONTROL OF THE 7110. MAXIMUM RATE DETERMINED BY PRINTER.

SEE ALSO B37528-4-1

CABLE, MODEL 7110A TO HP 5050B
SCHEMATIC #037528-7-1 REV A

TABLE 6.4 REPLACEABLE PARTS LIST

Equipment/Assembly Designation: ACCESSORY, CABLE, 7110A to HP 5050B #037528-4-1

(1) Reference Designation		(2) Name of Component and Description	(3) Mfr's Code	(4) Manufacturer's Part Number	(5) No. Times Used	(6) Remarks/ SD Stock No.
ITEM	REF					
1	P101	CONNECTOR: 50-pin male plug	02660	57-30500	2	J0171
1	P102	CONNECTOR: 50-pin male plug				
2		CABLE: 50 conductor	06811	W0248	6 ft.	W0248
3		SLEEVING: #16 Teflon				
4		CABLE: Schematic for hookup	06811	037528-7-1	1	037528-7-1

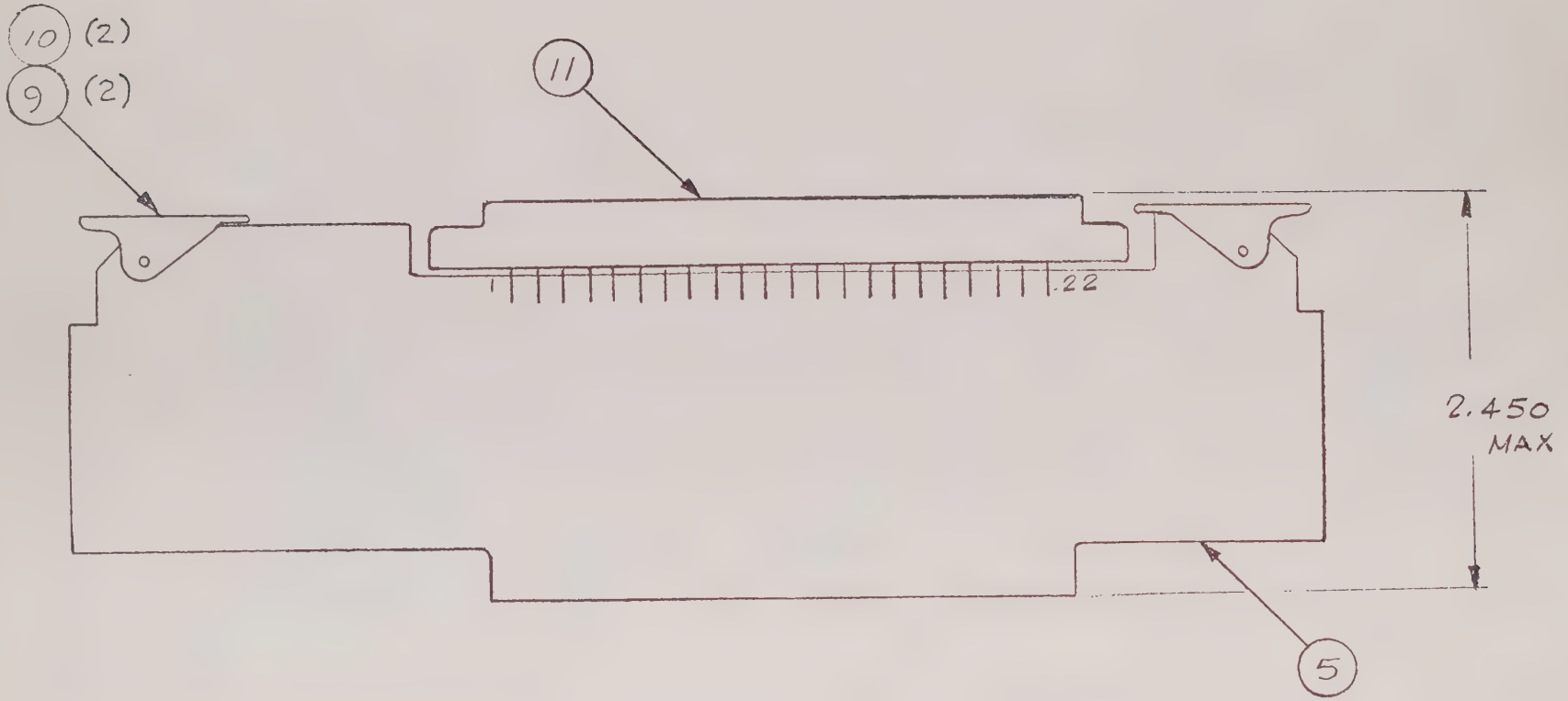

P.C. BOARD EXTENDER ASSEMBLY #037494-4-1 REV A

TABLE 6.4 REPLACEABLE PARTS LIST

Equipment/Assembly Designation: ACCESSORY, P.C. BOARD EXTENDER #037494-4-1

(1) Reference Designation		(2) Name of Component and Description	(3) Mfr's Code	(4) Manufacturer's Part Number	(5) No. Times Used	(6) Remarks/ SD Stock No.
ITEM	REF					
1		EXTENDER, P.C. BOARD	06811	037494-1-1	1	037494-1-1
9		EXTRACTOR, P.C., PLAIN	51495	1743	2	H1743
10		PIN, SPRING	73957	50-094-0250	2	H1083
11		CONNECTOR, 22-PIN, DUAL	05574	000221-0178	1	J0192

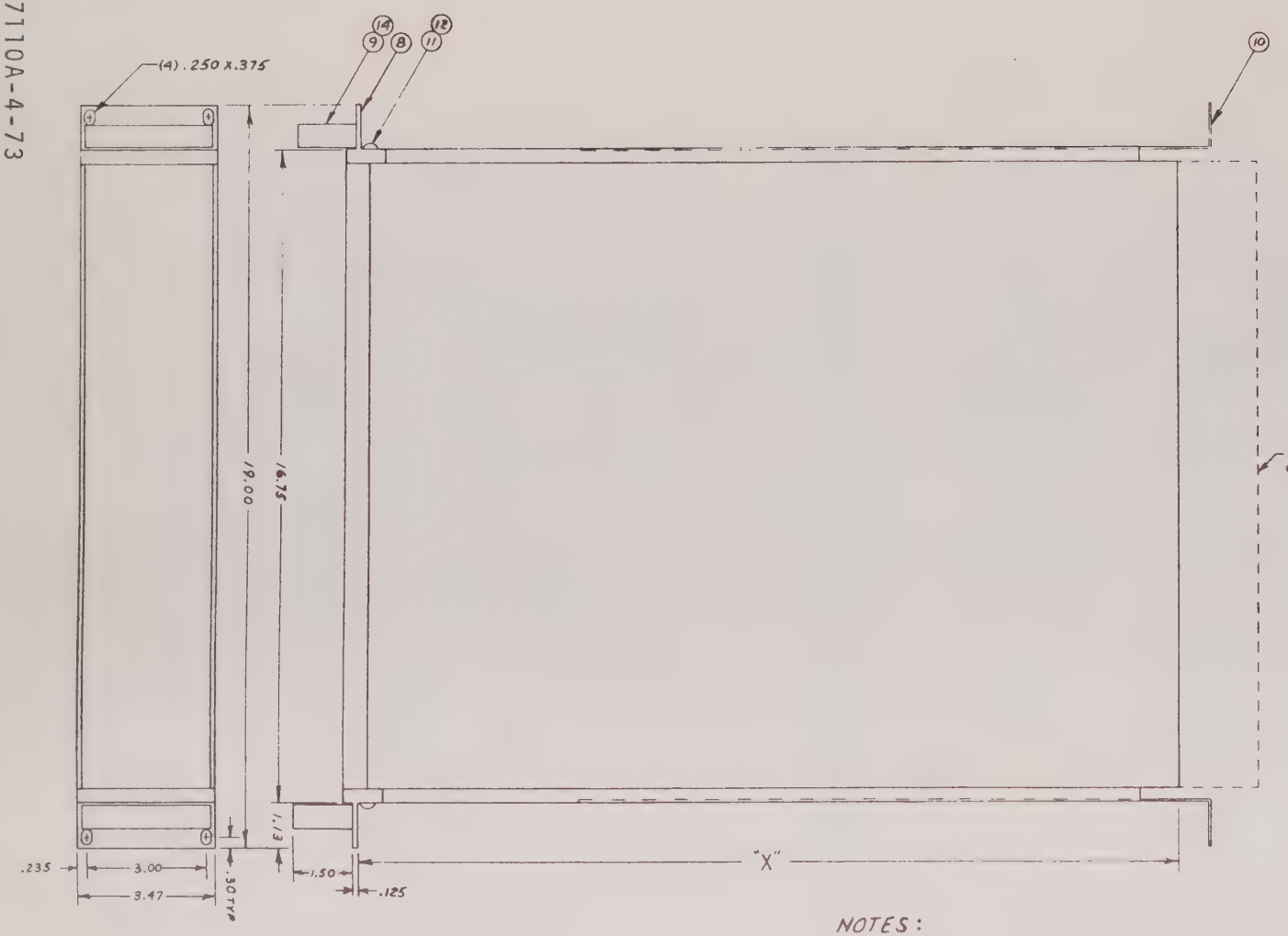

TABULATION		
P/L #	"X"	INSTR. DEPTH
39986-1	8.75	9.12
39986-2	10.75	11.12
39986-3	12.75	13.12
39986-4	14.75	15.12
39986-5	16.75	17.12
39986-6	18.75	19.12
39986-7	20.75	21.12

NOTES:

1. INSTR. ARE DRILLED TO ACCEPT 20" JONATHAN 120 QD SERIES SLIDES
2. ITEM 10 DELETED WHEN SHIPPED W/SLIDES

3-1/2" FULL RACK ASSEMBLY #039986 REV A

REPLACEABLE PARTS LIST

Equipment/Assembly Designation ACCESSORY, 3-1/2" FULL RACK #039986

(1) Reference Designation		(2) Name of Component and Description	(3) Mfr's Code	(4) Manufacturer's Part Number	(5) No. Times Used	(6) Remarks/ SD Stock No.
ITEM	REF					
		DELETE THE FOLLOWING:				
1		TRIM, END			4	033693-5
2		COVER, SIDE			2	033764-5
3		HANDLE			2	033570-5
4		ASSEMBLY, BAIL AND FOOT			1	H1927
		ADD THE FOLLOWING:				
8		TRIM, END: Rack mount	06811	039952-2	2	039952-2
9		HANDLE	06540	9268A-219-17	2	H1847
10		SUPPORT, REAR	06811	039951-2	2	039951-2
11		SCREW, PAN HEAD MACHINE: 8-32 X 5/8	MIL	MS51957-46	4	H1285
12		WASHER: Internal tooth #8	MIL	MS35333-72	4	H0658
13		ASSEMBLY/INSTALLATION DWG.			REF	039986
14		SCREW, FLAT HEAD MACHINE: 8-32 X 3/8	MIL	MS24693-C48	4	H1634
15		TRIM, REAR END			A/R	045626
16		SCREW, FLAT HEAD MACHINE 8-32 X 3/8, as required	MIL	MS24693-C48	4	H1634

CHAPTER 7
SUPPLEMENTAL INFORMATION

7.1 INTRODUCTION

This chapter contains revised or updated information reflecting changes in production requirements of this instrument. This information can include changes in assembly/schematic drawings, parts lists, operating instructions, calibration procedures, etc. Changes to parts lists will contain only the added parts, plus a list of deleted items. The supplemental pages for each assembly will be identified with the words SUPPLEMENTAL INFORMATION, followed by the nomenclature of the board. For example, if the A3, Input Amplifier P.C. Board is to be changed, the package identification will read as follows:

MODEL 7110A
SUPPLEMENTAL INFORMATION
A3, INPUT AMPLIFIER P.C. BOARD
SCHEMATIC #37176

Page identification for an October 19XX change will be:

37176-10-XX SUPPLEMENT; page numbering will be in numerical order using the same page numbers as the basic information with the addition of an "A". The A3, Input Amplifier P.C. Board supplemental pages will be A3-1A, A3-2A etc.

APPENDIX A
MANUFACTURER'S INDEX
CODE-TO-NAME CROSS-REFERENCE

Code	Name	Address
00779	Amp Inc.	P.O. Box 3608, Harrisburg, P.A. 17105
00809	Croven LTD.	500 Beech St., Whitby, Ontario, Canada
00853	Sangamo Electric Co. S. Carolina Div.	P.O. Box 128, Pickens, S. Carolina 29671
00121	Allen-Bradley Co.	1201 South 2nd St., Milwaukee, Wis. 53204
01295	Texas Instruments Inc. Semiconductor & Components Div.	13500 N. Central Expressway, Dallas, Tx. 75231
02114	Ferroxcube Corp.	P.O. Box 359, Mt. Marion Rd., Saugerties, N.Y. 12477
02660	Amphenol Corp.	2801 S. 25th Ave., Broadview, Ill. 60153
02763	Grippe Machining and Mfg. Co.	15642 Common Rd., Roseville, Mi. 48066
02768	Illinois Tool Works Inc. Fastex Division	195 Algonquin Rd., Des Plaines, Ill. 60016
03296	Nylon Molding Corp.	40 Brown St., Springfield, N.J. 07081
03508	General Electric Co. Semiconductor Products Dept.	Electronics Park, Syracuse, N.Y. 13201
03877	Transitron Electronic Corp.	168-186 Albion St., Wakefield, Ma. 01880
03888	Pyrofilm Corp.	60 S. Jefferson Rd., Whippany, N.J. 07981
04264	Circon Component Corp.	Santa Barbara Municipal Airport, Goleta, Ca. 93017
04713	Motorola Semiconductor Products Inc.	5005 East McDowell Rd., Phoenix, Arizona 85008
05574	Viking Industries Inc.	21001 Nordhoff, Chatsworth, Ca. 91311
05820	Wakefield Engineering Inc.	Audubon Rd., Wakefield, Ma. 01880
06383	Panduit Corp.	17301 Ridgeland, Tinley Park, Ill. 60477
06665	Precision Monolithics Inc.	1500 Space Park Drive, Santa Clara, Ca. 95050
06776	Robinson Nugent Inc.	P.O. Box 470, New Albany, In. 47150

APPENDIX A
MANUFACTURER'S INDEX
CODE-TO-NAME CROSS-REFERENCE (Cont'd)

Code	Name	Address
06811	Systron-Donner Corp.	10 Systron Drive, Concord, Ca. 94518
07047	Ross Milton Co., The	511 Second St. Pike, Southampton, Pa. 18966
07263	Fairchild Camera & Instrument Corp., Semiconductor Div.	313 Frontage Rd., Mountain View, Ca. 94040
08289	Blinn Delbert Co., Inc., The	1678 Mission Blvd., Pomona, Ca. 91766
08547	Wallace, R. G., Co., Inc.	2301 E Del Amo Blvd., Compton, Ca. 90220
08863	Nylomatic Div. of Wehco Plastics Co.	620 Nolan Ave., Norrisville, Pa. 19067
12014	Chicago Rivet and Machine Co.	950 S. 25th Ave., Bellwood, Ill. 60104
12406	Elpac Inc.	18651 Von Karman Ave., Irvine, Ca. 92664
12517	Component Research Co., Inc.	1717 19th St., Santa Monica, Ca. 90404
12617	Hamlin Inc.	Grove and Lake Sts., Lake Mills, Wi. 53551
13715	Fairchild Camera & Instrument Corp., Semiconductor Div. Diode Plant	4300 Redwood Hwy., San Rafael, Ca. 94903
15915	Tepro of Florida Inc.	375 Patricia Ave., Dunedin, Florida 33528
15933	Systron-Donner Corp. Datapulse Div.	10150 W. Jefferson Blvd., Culver City, Ca. 90230
16299	Corning Glass Works Electronic Components Div.	3900 Electronics Dr., Raleigh, N.C. 27604
16546	U. S. Capacitor Corp.	2151 N. Lincoln, Burbank, Ca. 91504
18612	Vishay Resistor Products Div. Vishay Intertechnology Inc.	68 Lincoln Hwy., Malvern, Pa. 19355
19701	Electra/Midland Corp.	P.O. Box 760, Mineral Wells, Tx. 76067
20908	Electronic Concepts Div. A-T-O, Inc.	P.O. Box 813, Rt. 29, N. Charlottesville, Va. 22904
21604	Buckeye Stamping Co., The	555 Marion Rd., Columbus, Ohio 43207
22599	Elastic Stop Nut Div. of Amerace Esna Corp.	16150 Stagg St., Van Nuys, Ca. 91407

APPENDIX A
MANUFACTURER'S INDEX
CODE-TO-NAME CROSS-REFERENCE (Cont'd)

Code	Name	Address
23050	Product Components Corp.	30 Lorraine Ave., Mt. Vernon, N.Y. 10553
23936	Pamotor Inc.	312 Seventh St., San Francisco, Ca. 94103
24223	Vamistor Corp.	242 Ridgedale Ave., Cedar Knolls, N.J. 07927
24655	General Radio	300 Baker Ave., Concord, Ma. 01742
26695	Kleen-Stik Products	420 Frelinghuysen Ave., Newark, N.J. 07114
26742	Methode Electronics Inc.	7447 W. Wilson Ave., Chicago, Ill. 60656
27014	National Semiconductor Corp.	2950 San Ysidro Way, Santa Clara, Ca. 95051
27264	Molex Products Co.	5224 Katrine Ave., Downers Grove, Ill. 60515
27282	Lartronics	981 Shulman Ave., Santa Clara, Ca. 95050
27642	L and L Tube Bendors	1101 Acorn St., Rockford, Ill., 61103
28480	Hewlett-Packard Co.	1501 Page Mill Rd., Palo Alto, Ca. 94304
28520	Heyman Mfg. Co.	147 N. Michigan Ave., Kenilworth, N.J. 07033
29832	Teledyne Philbrick Nexus	Allied Drive at Route 128, Dedham, Ma. 02026
31433	Union Carbide Corp. Material Systems Div. Components Dept.	Highway 276, S.E., Greenville, S.C. 29606
32293	Intersil Inc.	10900 N. Tantau Ave., Cupertino, Ca. 95014
33967	Intech Inc.	1220 Coleman Ave., Santa Clara, Ca. 95050
34371	Harris Semiconductor Div. of Harris-Intertype Corp.	P.O. Box 883, Melbourne, Fl. 32901
42498	National Radio Co., Inc.	78 Stone Pl., Melrose, Ma. 02176
51495	R & D Plastics	780 32nd St., Richmond, Ca. 94804
56289	Sprague Electric Co.	North Adams, Ma. 01247
58474	Superior Electric Co.	383 Middle St., Bristol, Ct. 06010
70903	Belden Corp.	415 S. Kilpatrick, Chicago, Ill. 60644

APPENDIX A
MANUFACTURER'S INDEX
CODE-TO-NAME CROSS-REFERENCE (Cont'd)

Code	Name	Address
71279	Cambridge Thermionic Corp.	445 Concord Ave., Cambridge, Ma. 02138
71590	Globe-Union Inc. Centralab Div.	P.O. Box 591, Milwaukee, Wis. 53201
71707	Coto Coil Co., Inc.	65 Pavilion Ave., Providence, R.I. 02905
71744	Chicago Miniature Lamp Works	4433 Ravenswood Ave., Chicago, Ill. 60640
72136	Electro Motive Mfg. Co., Inc.	South Park and John Sts., Willimantic, Conn. 06226
72259	Nytronics Inc.	550 Springfield Ave., Berkeley Heights, N.J. 07922
73138	Beckman Instruments Inc. Helipot Division	2500 Harbor Blvd., Fullerton, Ca. 92634
73734	Federal Screw Products Inc.	3917 N. Kenzie Ave., Chicago, Ill. 60618
73899	J F D Electronics Corp.	15th at 62nd St., Brooklyn, N.Y. 11219
73957	Groov-Pin Corp.	1125 Hendricks Causeway, Ridgefield, N.J. 07657
74370	Birtcher Corp., The Instrument Division	1200 Monterey Pass Road, Monterey Park, Ca. 91754
74970	Johnson Co., E.F.	299 10th Ave. S.W., Waseca Mn. 56093
75042	TRW Electronic Components IRC Philadelphia Div.	401 N. Broad St., Philadelphia, Pa. 19108
75915	Littlefuse Inc.	800 E. Northwest Hwy., Des Plains, Ill. 60016
76381	Minnesota Mining and Mfg. Co.	3 M Center, St. Paul, Mn. 55101
76493	Miller Co., J.W.	P.O. Box 5825, Compton, Ca. 90024
78189	Illinois Tool Works Inc. Shakeproof Div.	St. Charles Road, Elgin, Ill. 60126
79727	Continental-Wirt Electronics Corp.	26 W. Queen St., Philadelphia, Pa. 19144
80294	Bourns Inc.	1200 Columbia Ave., Riverside, Ca. 92507
81073	Grayhill Inc.	561 Hillgrove Ave., La Grange, Ill. 60525
81483	International Rectifier Corp.	9220 Sunset Blvd., Los Angeles, Ca. 90069

APPENDIX A
MANUFACTURER'S INDEX
CODE-TO-NAME CROSS-REFERENCE (Cont'd)

Code	Name	Address
82389	Switchcraft Inc.	5555 N. Elston Ave., Chicago, Ill. 60630
83330	Smith Herman, H., Inc.	812 Snediker Ave., Brooklyn, N.Y. 11207
83781	National Electronics Inc.	P.O. Box 269, Geneva, Ill. 60134
84841	Milford Rivet and Machine Co. New England Div.	857 Bridgeport Ave., Milford, Ct. 06460
86797	Rogan Bros. Inc.	8031 N. Monticello, Skokie, Ill. 60076
86928	Seastrom Mfg. Co. Inc.	701 Sonora Ave., Glendale, Ca. 91201
88245	Litton Precision Products Inc. Useco, Div. Litton Industries	13536 Saticoy Street, Van Nuys, Ca. 91409
90201	Mallory Capacitor Co.	3029 East Washington St., Indianapolis, In. 46206
91418	Radio Materials Co.	4242 W. Bryn Mawr, Chicago, Ill. 60646
91506	Augat Inc.	33 Perry Ave., Attleboro, Ma. 02703
91637	Dale Electronics Inc.	P.O. Box 609, Columbus, Ne. 68601
91662	Elco Corp.	Maryland Road & Computer Ave., Willow Grove, Pa. 19090
91836	Kings Electronics Co. Inc.	40 Marbledale Rd., Tuckahoe, N.Y. 10707
95348	Gordos Corp.	250 Glenwood Ave., Bloomfield, N.J. 07003
95987	Weckesser Co. Inc.	4444 West Irving Park Rd., Chicago, Ill. 60641
97945	Pennwalt Corp. S S White Industrial Products Div.	Prince Bay, Staten Island, N.Y. 10309
98921	O and M Mfg. Co.	8203 Market St. Rd., Houston, Tx. 77029
98978	International Electronic Research Corp.	135 West Magnolia Ave., Burbank, Ca. 91502
99392	S T M	2904 Chapman St., Oakland, Ca. 94601

MP MASTER
MA34066